LAUFEN
bathrooms

LIVING STYLE

Washbasin

8 1443 9 000 104 1
8 1443 9 000 109 1
8 1443 9 000 136 1

TECHNICAL DATA

Order No.	81443 9 000 104 1 81443 9 000 109 1 81443 9 000 136 1
Certification	cUPC (IAPMO/ CSA) ADA compliant
Dimensions	66 1/4" x 33 2/4" x 19" (1680x850x480mm)
Options	104-one open tap hole 109-without tap hole 136-3 open tap holes
Weight	85.8 lbs (39 kg)
Mat. Excl.	Fixed open waste chrome no. 8.95439 Pair of bolts no. 8.99882

Specification	LIVING Style washbasin, without overflow
Acc. excl.	LIVING Towel rail chrome no. 8.95438 CASE for LIVING Vanity unit no. 4.75911 & 4.75901 Siphon cover chrome no. 8.91870

TECHNICAL DRAWINGS

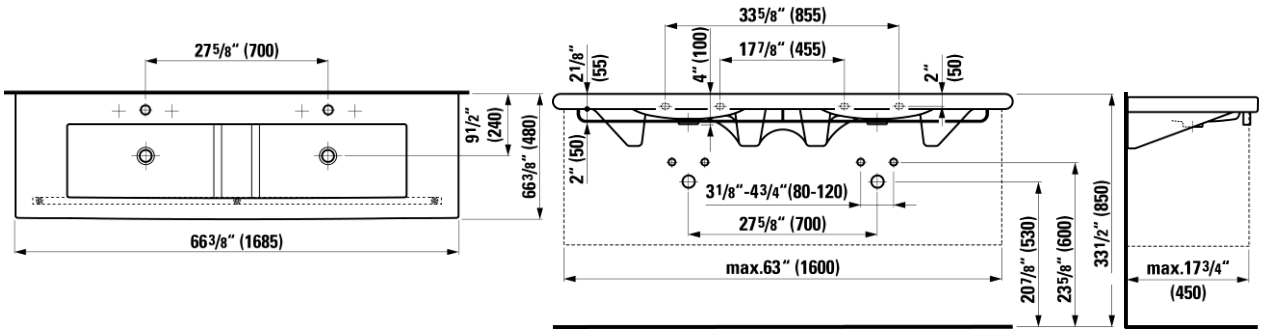

Laufen Bathrooms USA toll free phone (866) 696-2493 toll free fax (866) 264-7622 usa@laufen.com
Laufen Bathrooms CANADA toll free phone (866) 479-8425 toll free fax (866) 479-8434 canada@laufen.com