# EUPHORIA SYSTEM 180
## Thermostatic Shower System with tub spout
MODEL # 26177

Pure Freude an Wasser

GROHE America, Inc | 200 North Gary Avenue, Suite G, Roselle, IL 60172
Phone: +1 (800) 444-7643 | Fax: +1 (800) 225-2778 | us-customerservice@grohe.com

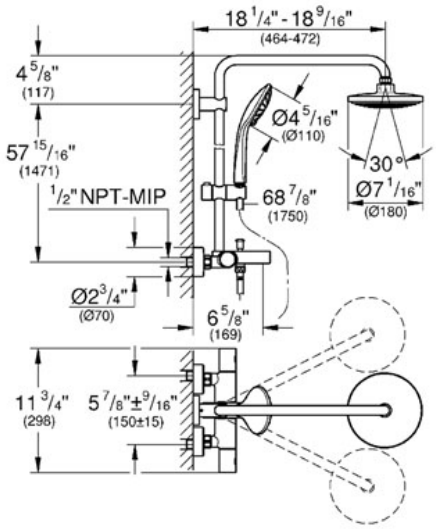


**Product Description:**
**Thermostatic Shower System with tub spout**

**Standard Specification:**
- **GROHE EcoJoy®** technology for less water and perfect flow
- **GROHE StarLight®** finish
- **GROHE DreamSpray®** perfect flow
- 17 3/4" horizontal swivel shower arm
- Head shower 1 spray (27 492)
- Rain
- Chrome plated spray face
- With ball joint
- Rotation angle ± 15°
- Hand shower 2 sprays (27 238)
Rain, SmartRain
- GROHE SprayDimmer
- Adjustable in height with gliding element
- 69" Silverflex shower hose (28 388 000)
- Max FLow Rate 2.5 gpm
- **SpeedClean** anti-lime system
- Rotation cone for Twistfree-function
- Wall installation
- **GROHE CoolTouch®**
- Exposed thermostatic temperature control with SafeStop® at 100°F / 38°C
- Includes manual tub/shower diverter
- 6 5/8" Tub Spout reach
- 62 ½" Overall rail height
- Tub Spout Flow Rate: 5.3 gpm (20 L/min) at 45 PSI
- Switch between hand shower and shower head shower via built-in diverter
- Bar with adjustable height hand shower holder

**Applicable Codes & Standards:**
- Energy Policy Act of 1992
- ASME A112.18.1/CSA B125.1

**Color:**
❑ 26177 000 chrome