acquabella®

Islita



Features an integrated overflow

MODEL 407
65.75" x 32.75" x 24.25"
FREESTANDING 77 gal to overflow
Mineral Composite
292 lbs / 132 kg soaker
Filling this tub to the maximum may require an above average size or dedicated water heater.

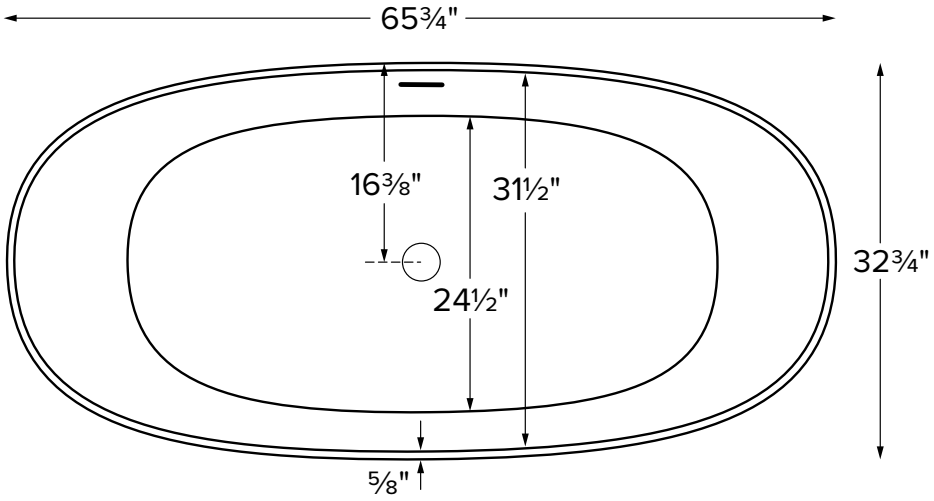

Drain Rough-In Measurement

X
16⅜"

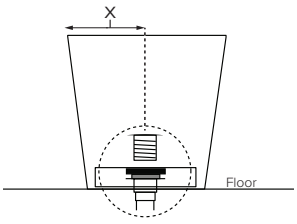

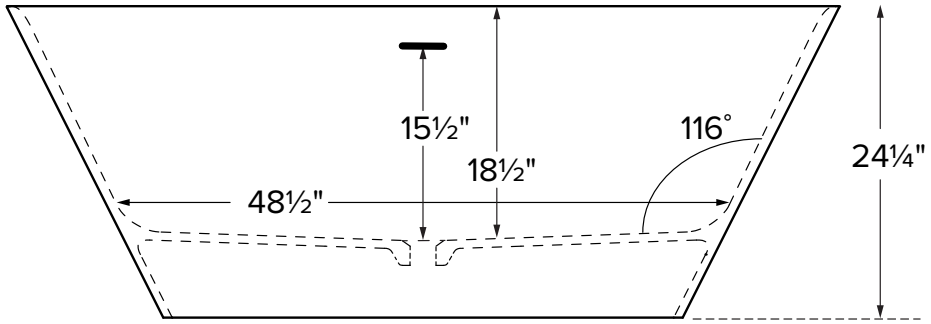

ELECTRICAL COMPONENTS & SPECIFICATIONS **Required Electrical Service** - 110 Volt		
Hydrotherapy Package	**Components Included**	**GFCI**
Air Massage	heated blower	1-15 amp
Electrical requirements may change with the addition of optional therapy components. See specific option details or installation information. CSA Certified C/US; B45.5/IAPMO ANSI Z124.1 and ANSI 112.19.7		

See the Installation & Operation Manual for more details.
MTI's Customer Service: Monday-Friday 8am-6pm EST
800-783-8827 or service@mtibaths.com

ORDERING AND INSTALLATION

- Before ordering or installing, please consider future access to equipment.
- Integrated overflow with toe tap drain included.
- Air baths require job site preparations for remote mounting the blower and required check valve. Check valve must be installed higher than the rim of the tub.
- Waterproof remote control included. Keypad is shipped loose and may be mounted nearby.
- Faucet valves cannot be installed on this tub model.

- Before discarding tub packaging, check for accessories that may be packaged inside.
- All product measurements are ±1/2".
- Specifications and configurations are subject to change without notice.
- Measurements herein supersede all others published prior to publication date below.

CSA # MMCT-407

©2025 by MTI Baths, Inc. Modification Rights Reserved

Rev. 03 20 2026