NEWPORT BRASS
Flawless Beauty. From Faucet to Finish.™

ASTOR

Widespread Lavatory Faucet

920C

Features

- Solid brass construction
- Brass valve bodies
- Quarter-turn washerless ceramic disc valve cartridges
- Spout assembly with integral supply hoses
- Pop-up drain with tailpiece
- 4.30” (10.9 cm) spout height at outlet
- 5.82” (14.8 cm) spout reach (c-c)
- For 8” (20.3 cm) centers - Maximum 20” (50.8 cm)
- ADA Compliant
- 1.2 GPM (4.5 LPM) Max



Codes / Standards Compliance

Meets or exceeds the following at date of manufacture:

- ASME A112.18.1/CSA B125.1-18
- IAPMO/cUPC
- NSF/ANSI 61, SECTION 9
- NSF/ANSI 372
- IPC
- ADA & ICC/ANSI A117.1
- Energy Policy Act of 1992
- EPA WaterSense
- California Energy Commission
- All applicable US Federal and State material regulations

Colors / Finishes

- 10B: Oil Rubbed Bronze
- 15: Polished Nickel
- 15S: Satin Nickel - PVD
- 26: Polished Chrome

- Other: Refer to the Newport Brass catalog for additional color/finish options.

Specified Model

Model	Description	Colors | Finishes				
920C	Widespread Lavatory Faucet	☐ 10B	☐ 15	☐ 15S	☐ 26	☐ Other

Product Specification **Add “Color / Finish” suffix to Model number, below.**

The two-handle Widespread Lavatory Faucet shall be made of solid brass construction. Faucet shall incorporate a spout assembly with integral supply hoses and feature brass valve bodies with quarter-turn washerless ceramic disc valve cartridges. Faucet shall have a 1.2 gallon (4.5 liter) per minute maximum flow rate. Product shall be for 8” (20.3 cm) centers - Maximum 20” (50.8 cm). Product shall incorporate a 4.30” (10.9 cm) spout height at outlet and a 5.82” (14.8 cm) spout reach (c-c). Faucet shall include a pop-up drain with tailpiece and incorporate ADA compliant traditional cross handles. Widespread Lavatory Faucet shall be Newport Brass Model 920C/____ .

t: 949.417.5207 | www.newportbrass.com
©2020 Brasstech, Inc.

920C

PRODUCT DIMENSIONS *(Units are in inches)*

Product Dimensions are provided for reference only. For specific product installation guidelines, please reference the Installation Instructions of the product being installed.

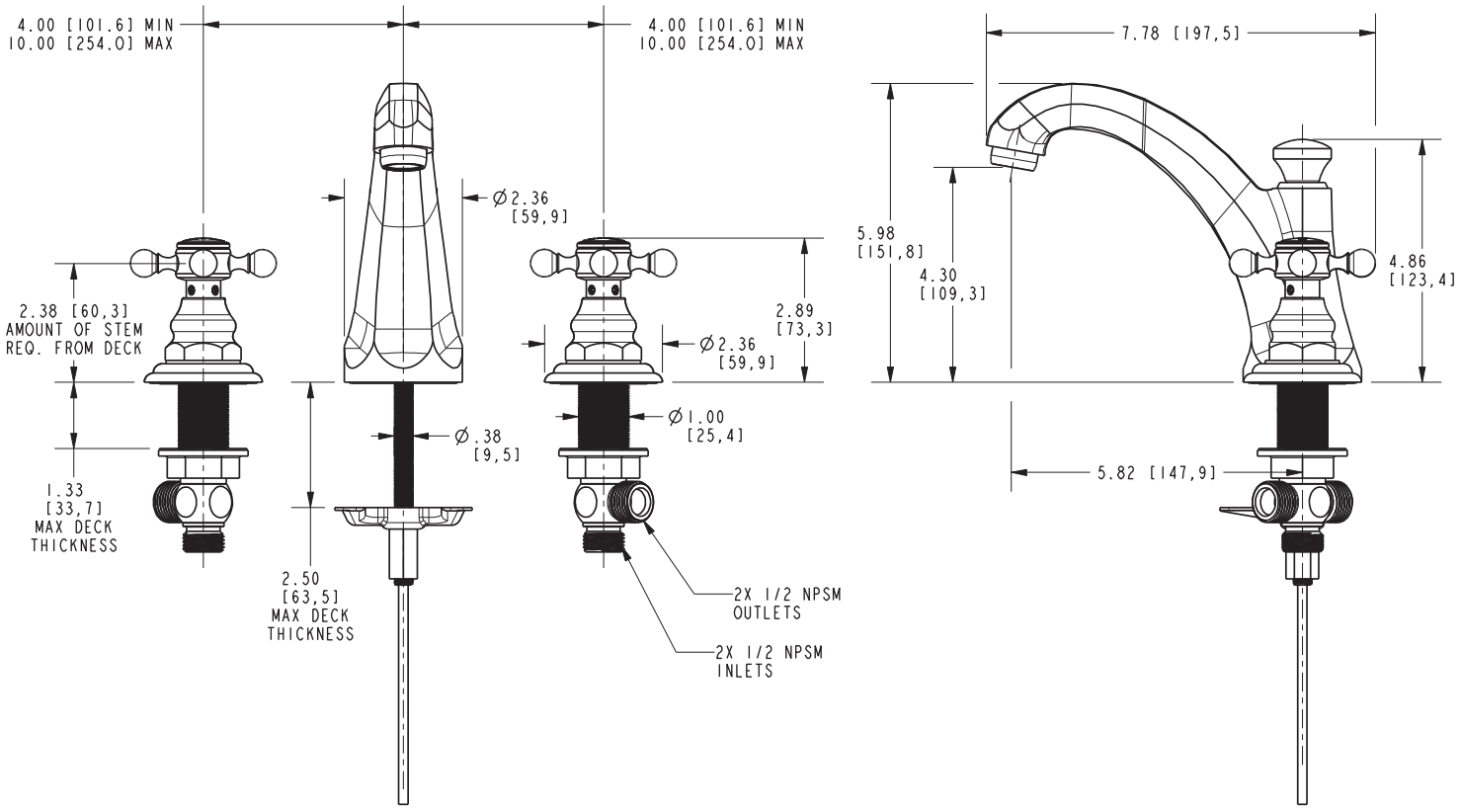

NEWPORT BRASS
Flawless Beauty. From Faucet to Finish.™

t: 949.417.5207 | www.newportbrass.com

©2020 Brasstech, Inc.