NEWPORT BRASS
Flawless Beauty. From Faucet to Finish.™

ASTOR

Widespread Lavatory Faucet

920

Features

- Solid brass construction
- Brass valve bodies
- Quarter-turn washerless ceramic disc valve cartridges
- Spout assembly with integral supply hoses
- Pop-up drain with tailpiece
- 1.43” (3.7 cm) spout height at outlet
- 5.62” (14.3 cm) spout reach (c-c)
- For 8” (20.3 cm) centers - Maximum 20” (50.8 cm)
- ADA Compliant
- 1.2 GPM (4.5 LPM) Max

Codes / Standards Compliance

Meets or exceeds the following at date of manufacture:

- ASME A112.18.1/CSA B125.1
- IAPMO/cUPC
- NSF/ANSI/CAN 61, SECTION 9
- NSF/ANSI 372
- IPC
- ADA & ICC/ANSI A117.1
- Energy Policy Act of 1992
- EPA WaterSense
- California Energy Commission
- All applicable US Federal and State material regulations



Colors / Finishes

- 10B: Oil Rubbed Bronze
- 15: Polished Nickel
- 15S: Satin Nickel - PVD
- 26: Polished Chrome

- Other: Refer to the Newport Brass catalog for additional color/finish options.

Specified Model

Model	Description	Colors | Finishes	
920	Widespread Lavatory Faucet	☐ 10B ☐ 15 ☐ 15S ☐ 26	☐ Other

Product Specification: Add size designator and “Color / Finish” suffix to Model number, below.

The two-handle Widespread Lavatory Faucet shall be made of solid brass construction. Faucet shall incorporate a spout assembly with integral supply hoses and feature brass valve bodies with quarter-turn washerless ceramic disc valve cartridges. Faucet shall have a 1.2 gallon (4.5 liter) per minute maximum flow rate. Product shall be for 8” (20.3 cm) centers - Maximum 20” (50.8 cm). Product shall incorporate a 1.43” (3.7 cm) spout height at outlet and a 5.62” (14.3 cm) spout reach (c-c). Faucet shall include a pop-up drain with tailpiece and incorporate ADA compliant contemporary cross handles. Widespread Lavatory Faucet shall be Newport Brass Model 920/____ .

t: 949.417.5207 | www.newportbrass.com
©2012 Brasstech, Inc.

920

Product Dimensions are provided for reference only. For specific product installation guidelines, please reference the Installation Instructions of the product being installed.

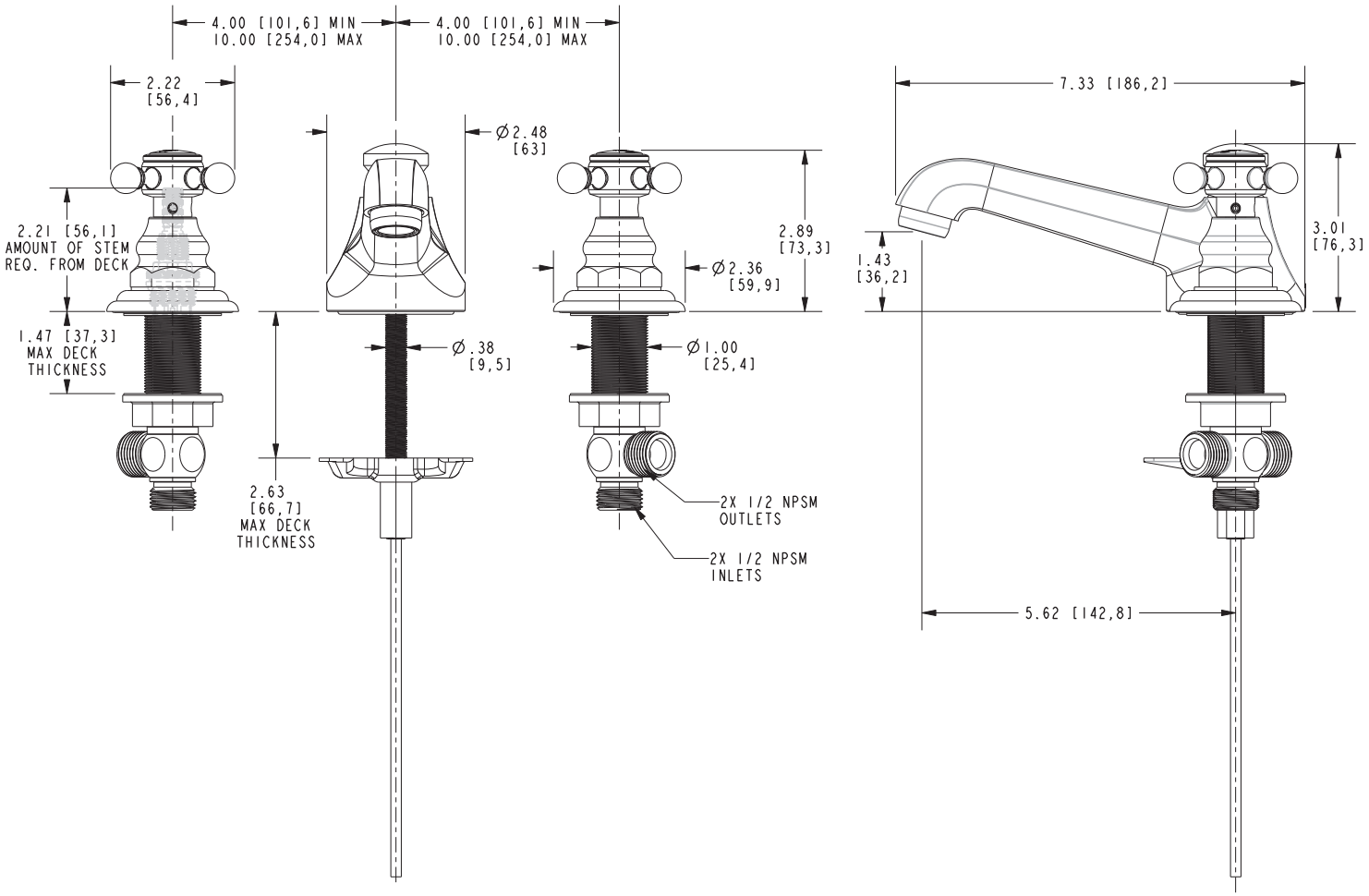

NEWPORT BRASS
Flawless Beauty. From Faucet to Finish.™

t: 949.417.5207 | www.newportbrass.com

©2012 Brasstech, Inc.