NEWPORT BRASS
Flawless Beauty. From Faucet to Finish.™

ALVESTON

Tub or Shower Trim
(less tub spout or showerhead, arm or flange)

4-924BP

Also 3-163, 3-163B, 2-532

Features
- Solid brass construction
- Face plate with ADA compliant traditional cross handle
- ADA compliant traditional cross handle assembly and insert options for control valve
- Intended for use with Newport Brass rough valve(s) as specified (Required Accessory)
- ADA Compliant

Codes / Standards Compliance
Meets or exceeds the following at date of manufacture:
- ASME A112.18.1/CSA B125.1
- IAPMO/cUPC
- IPC
- ADA & ICC/ANSI A117.1
- All applicable US Federal and State material regulations

Colors / Finishes
- 10B: Oil Rubbed Bronze
- 15: Polished Nickel
- 15S: Satin Nickel - PVD
- 26: Polished Chrome
- Other: Refer to the Newport Brass catalog for additional color/finish options.



4-924BP | 3-163 | 3-163B | 2-532

Specified Model

Model	Description	Colors | Finishes				
4-924BP	Tub or Shower Trim (less tub spout or showerhead, arm or flange)	☐ 10B	☐ 15	☐ 15S	☐ 26	☐ Other
3-163	Shower System Control Valve Trim (Escutcheon/Handle, Arrow Insert)	☐ 10B	☐ 15	☐ 15S	☐ 26	☐ Other
3-163B	Shower System Control Valve Trim (Escutcheon/Handle, Plain Insert)	☐ 10B	☐ 15	☐ 15S	☐ 26	☐ Other
2-532	Optional Metal Insert for System Control Valve Trim	☐ 10B	☐ 15	☐ 15S	☐ 26	☐ Other

Required Accessory:

System Element	Shower (or Tub) Valve	Control Valve (Optional)
Description	BP Valve	3-Outlet Diverter
Inlet/Outlet Size	1/2”	1/2”
Part Number	☐ 1-684	☐ 1-703
Image		

Product Specification: **Add size designator and “Color / Finish” suffix to Model number, below.**

The single-control Tub or Shower Trim (less tub spout or showerhead, arm & flange) shall be made of solid brass construction. Tub or Shower Trim shall include faceplate with ADA compliant handle. Shower System Control Valve Trim(s) (Escutcheon/Handle) shall be ADA compliant when used with specified Shower System Control Valve. Tub or Shower Trim (less tub spout or showerhead, arm & flange) shall be Newport Brass Model 4-924BP/_____ and single-control Tub or Shower rough valve shall be Newport Brass Model 1-684. [Optional Shower System Control Valve Trim (Escutcheon/Handle) shall be 3-163___/_____ and Shower System Control Valve shall be 1-703]. [Metal Insert for System Control Valve Trim (Escutcheon/Handle) shall be 2-532/ _____.]

©2022 Brasstech, Inc.

NEWPORT BRASS
Flawless Beauty. From Faucet to Finish.™

4-924BP

PRODUCT DIMENSIONS *(Units are in inches)*

Product Dimensions are provided for reference only. For specific product installation guidelines, please reference the Installation Instructions of the product being installed.

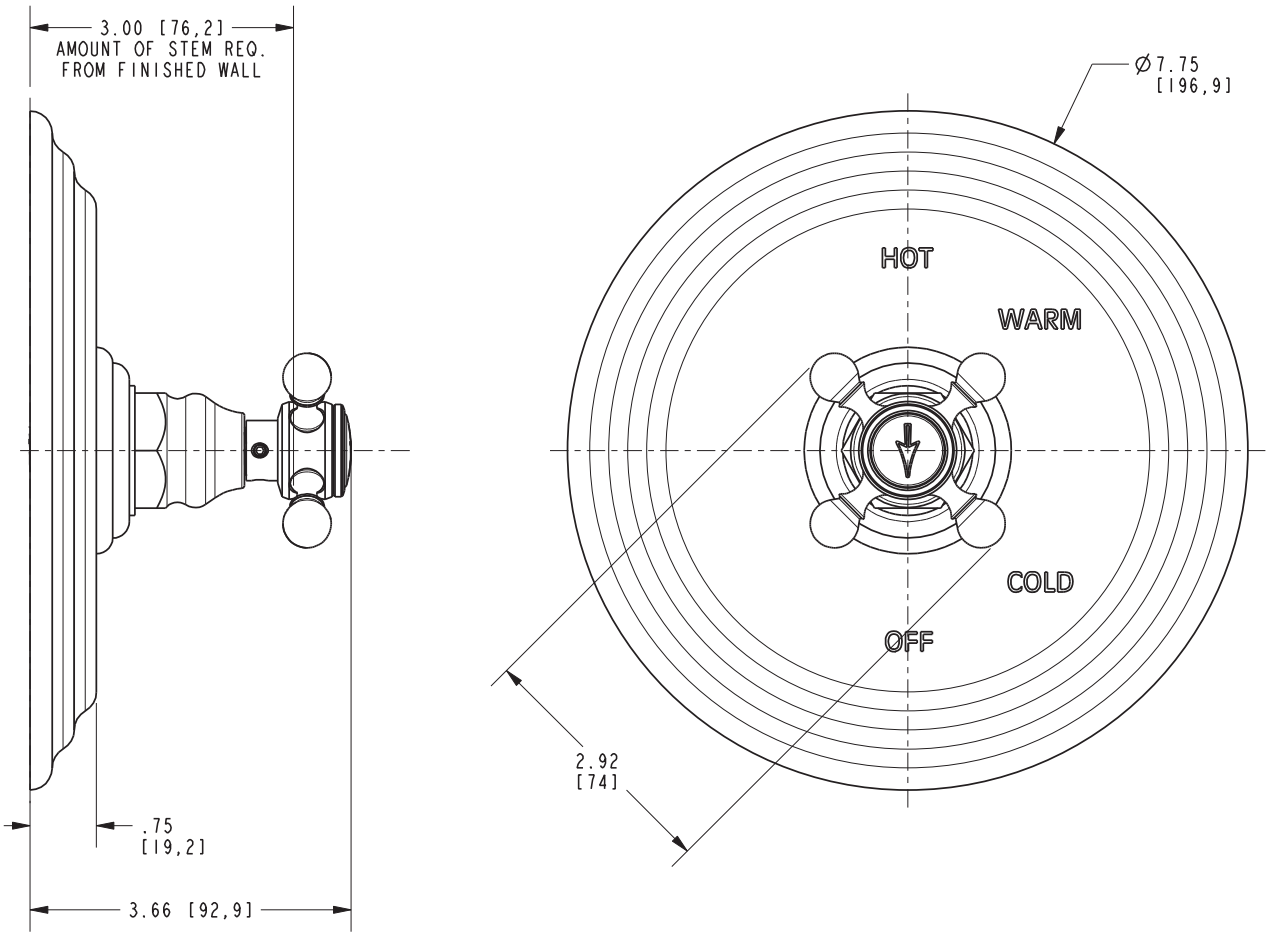

t: 949.417.5207 | www.newportbrass.com

©2022 Brasstech, Inc.