NEWPORT BRASS
Flawless Beauty. From Faucet to Finish.

SUTTON

TOILET TISSUE HOLDER

35-28

Features

Solid brass construction
Double-post design with spring-loaded roller
Complements Sutton poduct series

Codes / Standards Compliance

Meets or exceeds the following at date of manufacture:

All applicable US Federal and State material regulations

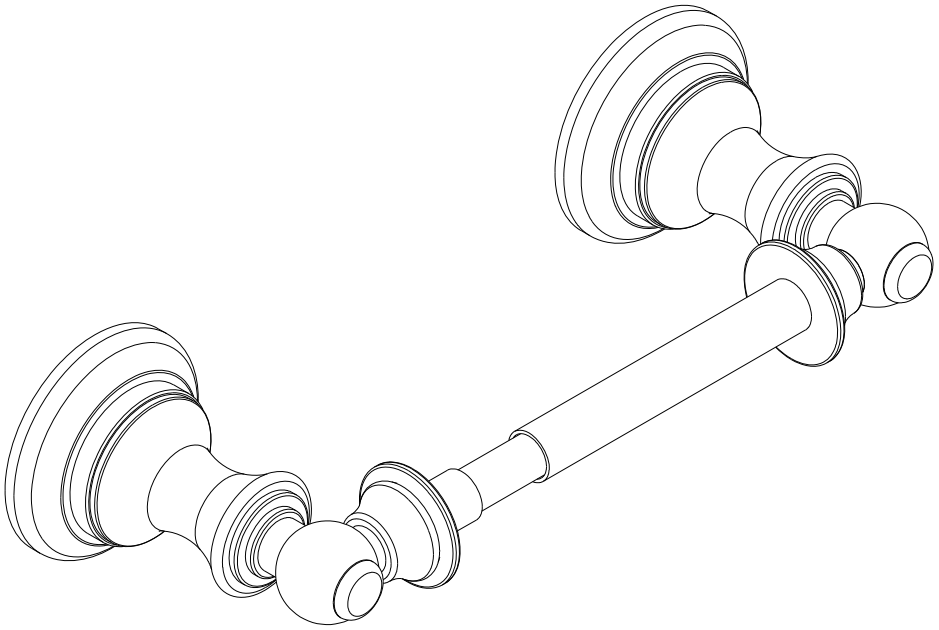

t: 949.417.5207 | www.newportbrass.com
©2025 NewportBrass

35-28

PRODUCT DIMENSIONS *(Units are in inches)*

Product Dimensions are provided for reference only. For specific product installation guidelines, please reference the Installation Instructions of the product being installed.

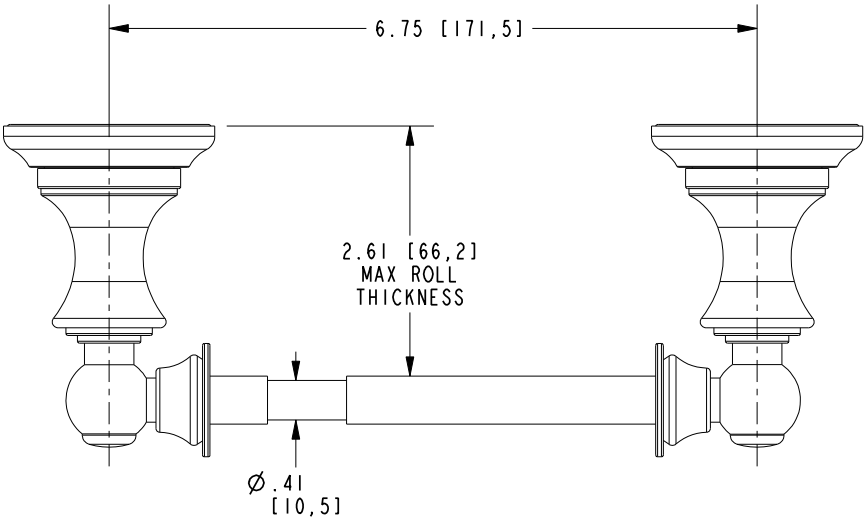

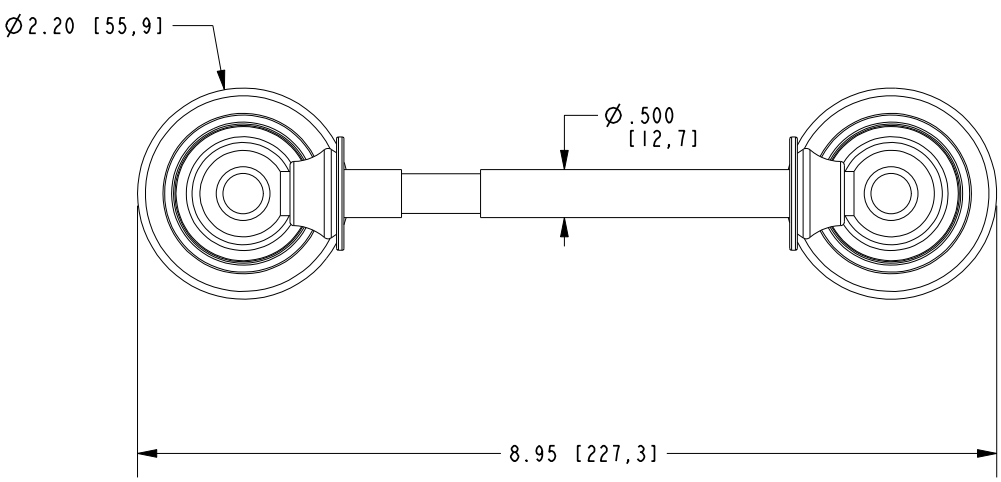

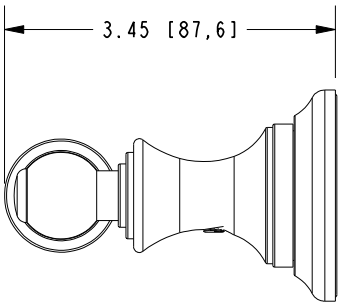

NEWPORT BRASS®
Flawless Beauty. From Faucet to Finish.

t: 949.417.5207 | www.newportbrass.com

©2025 NewportBrass