NEWPORT BRASS
Flawless Beauty. From Faucet to Finish.™

EAST LINEAR

Wall-Mounted Lavatory Trim

3-991

Features
- Solid brass construction
- 9.50” (24.1cm) spout reach (wall-to-center)
- 1/2” NPT spout inlet fitting
- Rough valve incorporates a brass valve body assembly
- Rough valve incorporates quarter-turn washerless ceramic disc valve cartridges
- Intended for use with Newport Brass rough valve as specified (Required Accessory)
- ADA Compliant
- 1.2 GPM (4.5 LPM) Max

Codes / Standards Compliance
Meets or exceeds the following at date of manufacture:
- ASME A112.18.1/CSA B125.1-18
- IAPMO/cUPC
- NSF/ANSI 61, SECTION 9
- NSF/ANSI 372
- IPC
- ADA & ICC/ANSI A117.1
- Energy Policy Act of 1992
- EPA WaterSense
- California Energy Commission
- All applicable US Federal and State material regulations



Colors / Finishes
- 10B: Oil Rubbed Bronze
- 15: Polished Nickel
- 15S: Satin Nickel - PVD
- 26: Polished Chrome

- Other: Refer to the Newport Brass catalog for additional color/finish options.

Specified Model

Model	Description	Colors | Finishes				
3-991	Wall-Mounted Tub Trim	☐ 10B	☐ 15	☐ 15S	☐ 26	☐ Other

Required Accessory

Application	Wall Lavatory Rough Valve
Description	2-Cartridge Assembly
Inlet/Outlet Size	1/2”
Part Number	1-532U
Image	

Product Specification **Add “Color / Finish” suffix to Model number, below.**

The Wall-Mounted Lavatory Faucet shall be made of solid brass construction. Wall-Mounted Lavatory Faucet shall incorporate cross handles and a 9.50” (24.1 cm) spout (wall-to-center) that incorporates a 1/2” NPT inlet fitting. Rough valve shall incorporate a brass valve body assembly and quarter-turn washerless ceramic disc valve cartridges. Wall-Mounted Lavatory Faucet shall be Newport Brass Model 3-991/____ and Newport Brass rough valve shall be 1-532U.

t: 949.417.5207 | www.newportbrass.com
©2021 Brasstech, Inc.

3-991

PRODUCT DIMENSIONS *(Units are in inches)*

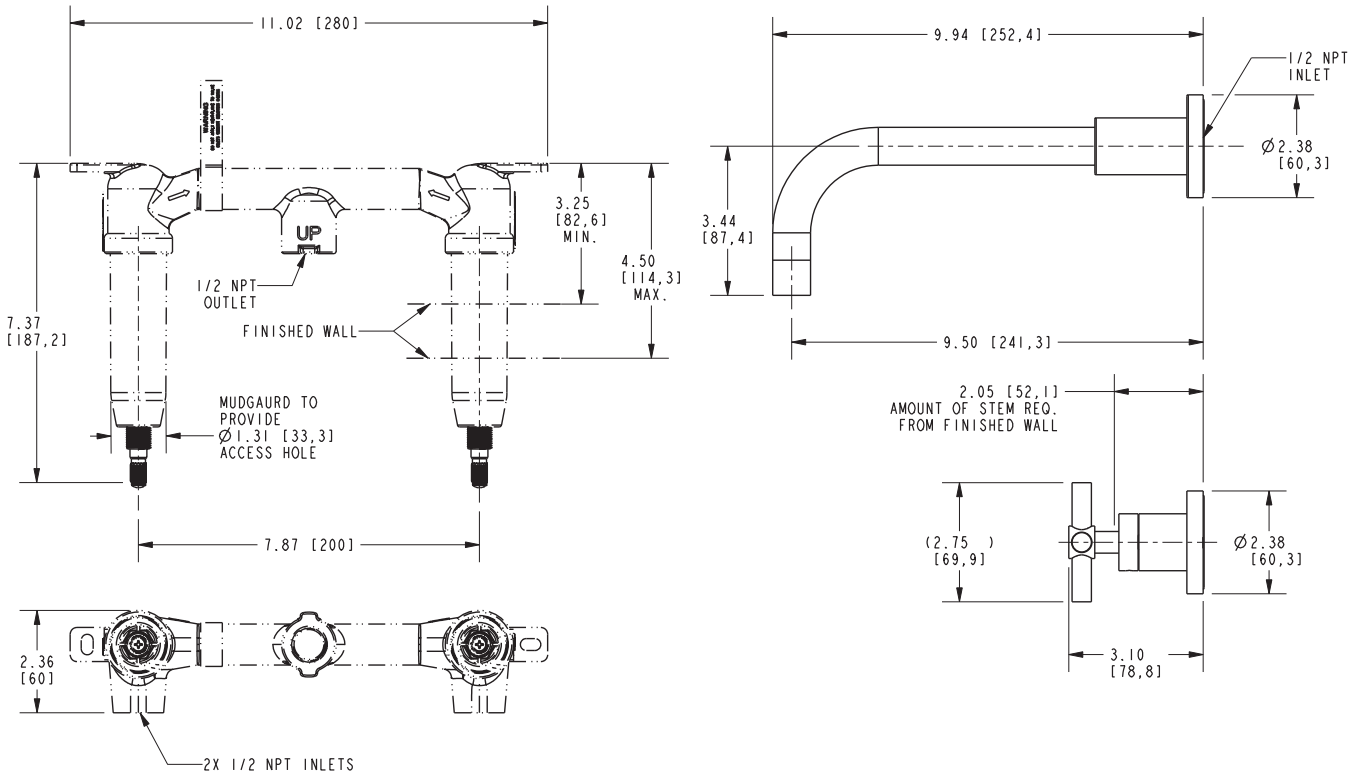

Product dimensions are provided for reference only. For specific product installation guidelines, please reference the installation instructions of the product being installed.

East Linear Wall-Mounted Tub Trim

3-991

NEWPORT BRASS
Flawless Beauty. From Faucet to Finish.™

t: 949.417.5207 | www.newportbrass.com
©2021 Brasstech, Inc.