NEWPORT BRASS
Flawless Beauty. From Faucet to Finish.™

ASTOR

Shower Trim
3-914BP
Also 3-343

Features
- Solid brass construction
- Face plate with ADA compliant traditional lever handle
- ADA compliant traditional lever handle assembly for control valve
- Intended for use with Newport Brass rough valve(s) as specified (Required Accessory)
- ADA Compliant
- 1.8 GPM (6.8 LPM) Max, Shower Only

Codes / Standards Compliance
Meets or exceeds the following at date of manufacture:
- ASME A112.18.1/CSA B125.1
- IAPMO/cUPC
- IPC
- ADA & ICC/ANSI A117.1
- Energy Policy Act of 1992
- EPA WaterSense
- California Energy Commission
- All applicable US Federal and State material regulations

Colors / Finishes
- 10B: Oil Rubbed Bronze
- 15: Polished Nickel
- 15S: Satin Nickel - PVD
- 26: Polished Chrome
- Other: Refer to the Newport Brass catalog for additional color/finish options.





3-914BP



3-343

Specified Model

Model	Description	Colors | Finishes
3-914BP	Shower Trim	☐ 10B ☐ 15 ☐ 15S ☐ 26 ☐ Other
3-343	Shower System Control Valve Trim (Escutcheon/Handle)	☐ 10B ☐ 15 ☐ 15S ☐ 26 ☐ Other

Required Accessory:

System Element	Shower (or Tub) Valve	Control Valve (Optional)
Description	BP Valve	3-Outlet Diverter
Inlet/Outlet Size	1/2”	1/2”
Part Number	☐ 1-684	☐ 1-703
Image		

Product Specification: **Add size designator and “Color / Finish” suffix to Model number, below.**

The single-control Shower Trim shall be made of solid brass construction. Shower Trim shall include showerhead with arm and flange and faceplate with ADA compliant handle. Showerhead shall have a maximum flow rate of 1.8 gallons (6.8 liters) per minute. Shower System Control Valve Trim(s) (Escutcheon/Handle) shall be ADA compliant when used with specified Shower System Control Valve. Shower Trim shall be Newport Brass Model 3-914BP/_____ and single-control Shower rough valve shall be Newport Brass Model 1-684. [Optional Shower System Control Valve Trim (Escutcheon/Handle) shall be 3-343/_____ and Shower System Control Valve shall be 1-703].

t: 949.417.5207 | www.newportbrass.com
©2022 Brasstech, Inc.

NEWPORT BRASS
Flawless Beauty. From Faucet to Finish.™

3-914BP

PRODUCT DIMENSIONS *(Units are in inches)*

Product Dimensions are provided for reference only. For specific product installation guidelines, please reference the Installation Instructions of the product being installed.

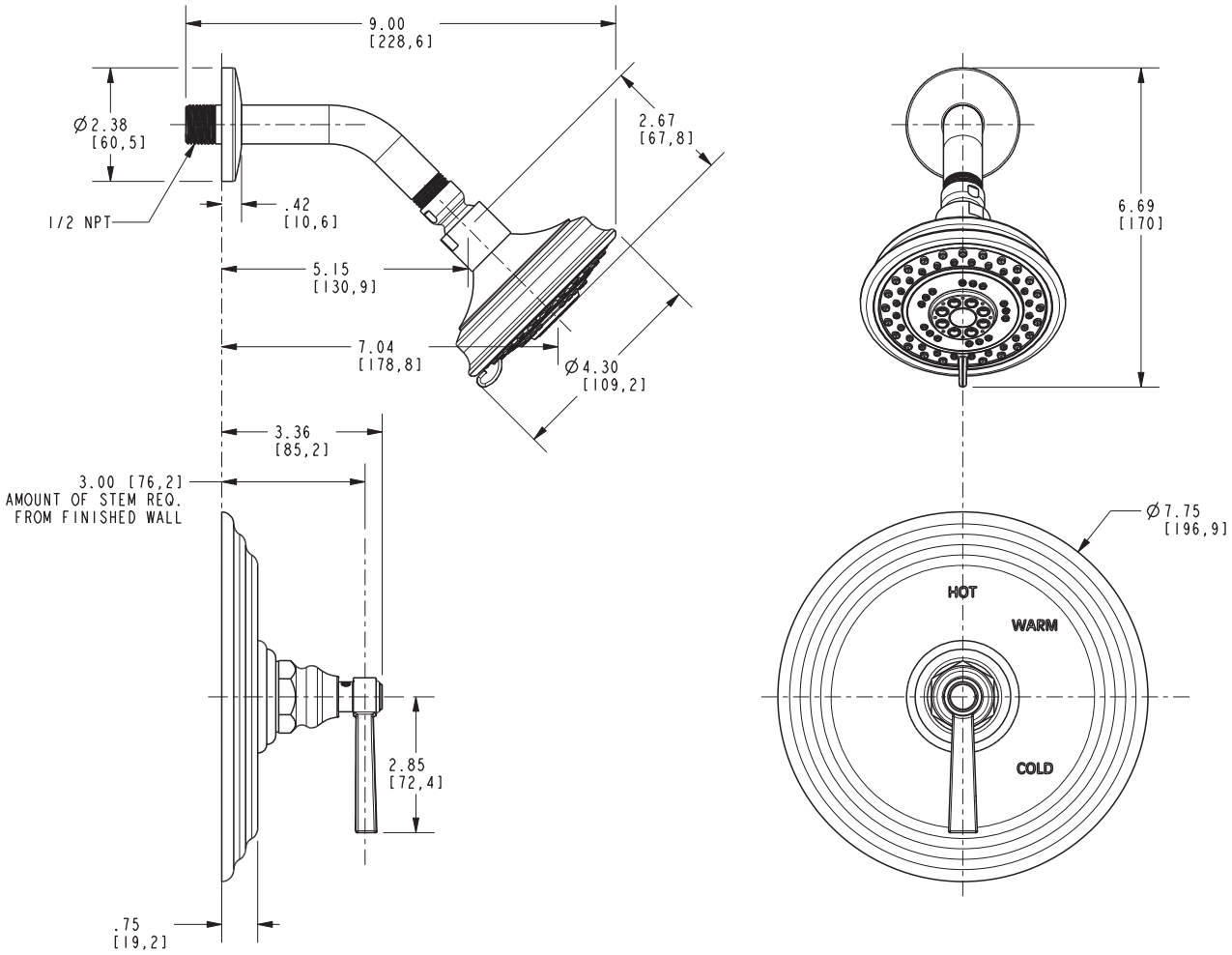

Astor Shower Trim

3-914BP

t: 949.417.5207 | www.newportbrass.com
©2022 Brasstech, Inc.