NEWPORT BRASS
Flawless Beauty. From Faucet to Finish.™

TOLMIN

Thermostatic Shower System Trim

3-3323TR

Features

- Solid brass construction
- Temperature-adjust handle for thermostatic valve
- Handle assembly for control valve
- Integrated volume control diverter for directed,variable water flow
- Maximum temperature override button
- Intended for use with Newport Brass Luxtherm®
- 1/2”rough valve(s) as specified (Required Accessory)

Codes / Standards Compliance

Meets or exceeds the following at date of manufacture:

- ASME A112.18.1/CSA B125.1
- IAPMO/cUPC
- IPC
- All applicable US Federal and State material regulations

Colors / Finishes

- 10B: Oil Rubbed Bronze
- 15: Polished Nickel
- 15S: Satin Nickel - PVD
- 26: Polished Chrome

- Other: Refer to the Newport Brass catalog for additional color/finish options.

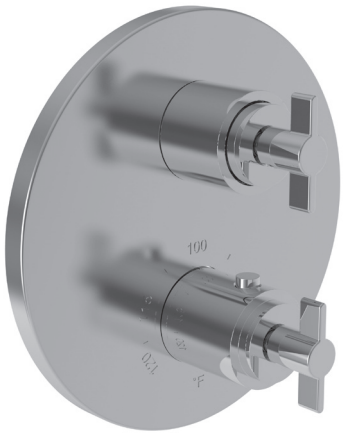

Specified Model

Model	Description	Colors | Finishes				
3-3323TR	Thermostatic Shower System Trim	☐ 10B	☐ 15	☐ 15S	☐ 26	☐ Other

Required Accessory

Application	Shower System Valve (Choose One)					[Optional}
Description	Thermostatic with Single Flow Control	Thermostatic with 2- Way Flow Control	Thermostatic with 3- Way Flow Control	Thermostatic with 3- Way Calgreen Flow Control	2- Way Flow Control with Share Function on Ports 1 & 2	[Optional Valve Trim Extension Kit]
Inlet/Outlet Size	1/2”	1/2”	1/2”	1/2”	1/2”	1/2”
Part Number	☐ 1-741	☐ 1-742	☐ 1-743	☐ 1-744	☐ 1-745	☐ 20-146
Image						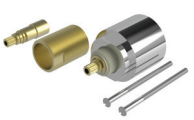

Product Specification

The Thermostatic Shower System Trim shall be made of solid brass construction. Thermostatic Shower System Trim shall include a faceplate, diverter, and temperature-adjust handles. Shower System Control Valve Trim(s) (Escutcheon/Handles) shall be ADA compliant when used with specified Shower System Control Valve(s). Thermostatic Shower System Trim shall be Newport Brass Model 3-3323TR/____ and Thermostatic Shower System Valve shall be Newport Brass Model 1-74__. [Optional Extension Kit for 1/2” Thermostatic Shower System Valve Trim shall be Newport Brass Model 20-146/ ___].

t: 949.417.5207 | www.newportbrass.com
©2022 Brasstech, Inc.

3-3323TR

Product Dimensions are provided for reference only. For specific product installation guidelines, please reference the Installation Instructions of the product being installed.

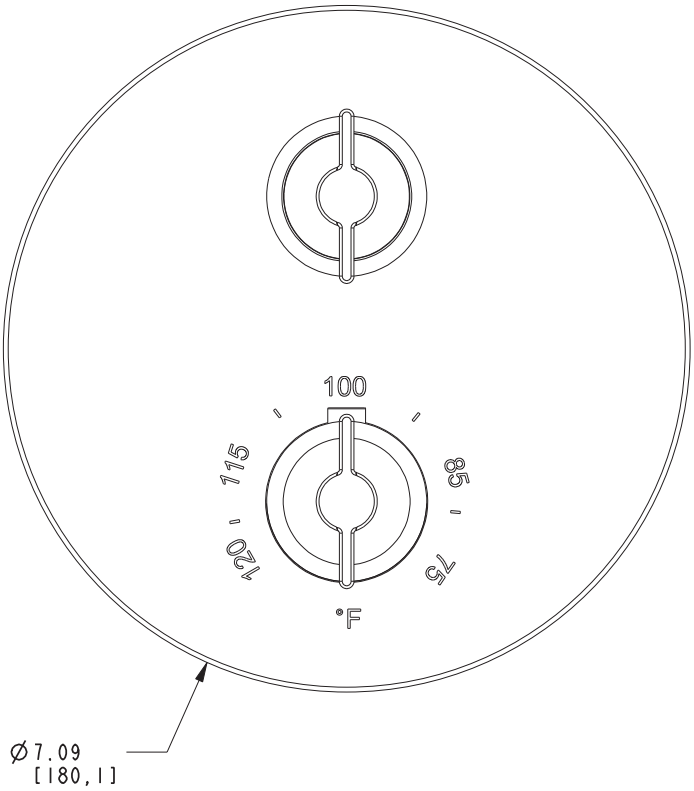

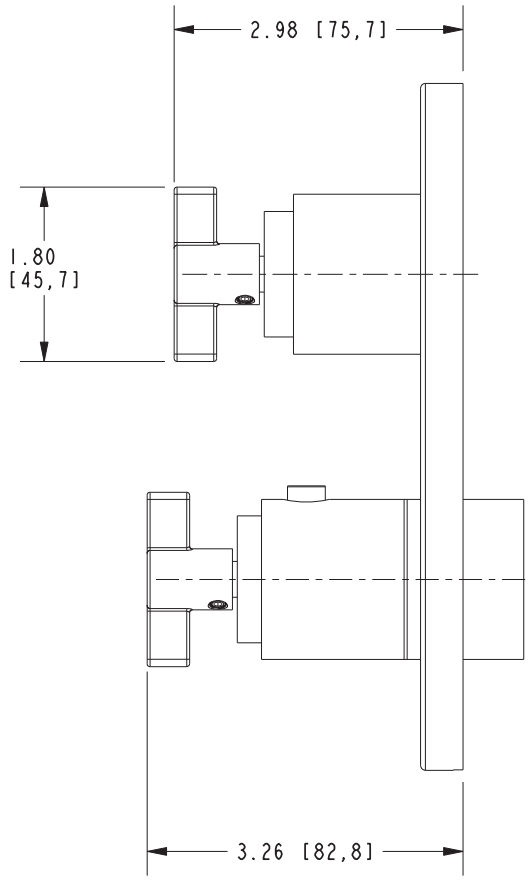

Tolmin Thermostatic Shower System Trim

3-3323TR

NEWPORT BRASS
Flawless Beauty. From Faucet to Finish.™

t: 949.417.5207 | www.newportbrass.com
©2022 Brasstech, Inc.