NEWPORT BRASS
Flawless Beauty. From Faucet to Finish.™

PARDEES

Features

- Solid brass construction
- Temperature-adjust handle for thermostatic valve
- Lever handle assembly for control valve
- Integrated volume control diverter for directed,variable water flow
- Maximum temperature override button
- Intended for use with Newport Brass Luxtherm®
- 1/2”rough valve(s) as specified (Required Accessory)

Thermostatic Shower System Trim

3-3233TR

Codes / Standards Compliance

Meets or exceeds the following at date of manufacture:

- ASME A112.18.1/CSA B125.1
- IAPMO/cUPC
- IPC
- All applicable US Federal and State material regulations



Colors / Finishes

- 10B: Oil Rubbed Bronze
- 15: Polished Nickel
- 15S: Satin Nickel - PVD
- 26: Polished Chrome
- Other: Refer to the Newport Brass catalog for additional color/finish options.

Specified Model

Model	Description	Colors | Finishes				
3-3233TR	Thermostatic Shower System Trim	☐ 10B	☐ 15	☐ 15S	☐ 26	☐ Other

Required Accessory

Application	Shower System Valve (Choose One)					[Optional}
Description	Thermostatic with Single Flow Control	Thermostatic with 2- Way Flow Control	Thermostatic with 3- Way Flow Control	Thermostatic with 3- Way Calgreen Flow Control	2- Way Flow Control with Share Function on Ports 1 & 2	[Optional Valve Trim Extension Kit]
Inlet/Outlet Size	1/2”	1/2”	1/2”	1/2”	1/2”	1/2”
Part Number	☐ 1-741	☐ 1-742	☐ 1-743	☐ 1-744	☐ 1-745	☐ 20-146
Image						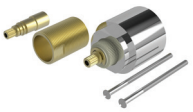

Product Specification **Add “Color / Finish” suffix to Model number, below.**

The Thermostatic Shower System Trim shall be made of solid brass construction. Thermostatic Shower System Trim shall include a faceplate, diverter, and temperature-adjust handles. Shower System Control Valve Trim(s) (Escutcheon/Handles) shall be ADA compliant when used with specified Shower System Control Valve(s). Thermostatic Shower System Trim shall be Newport Brass Model 3-3233TR/_____ and Thermostatic Shower System Valve shall be Newport Brass Model 1-74__. [Optional Extension Kit for 1/2” Thermostatic Shower System Valve Trim shall be Newport Brass Model 20-146/ ___].

©2021 Brasstech, Inc.

3-3233TR

Product Dimensions are provided for reference only. For specific product installation guidelines, please reference the Installation Instructions of the product being installed.

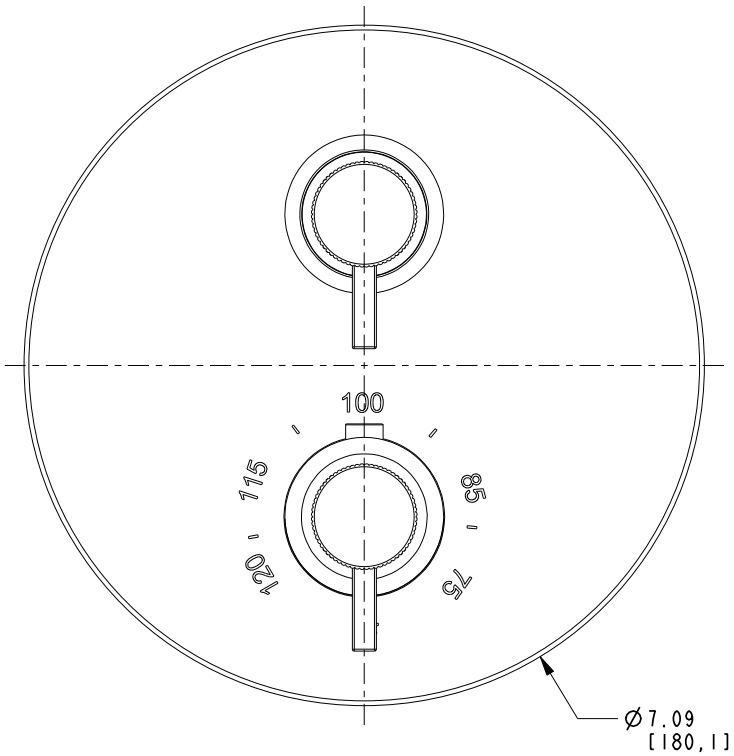

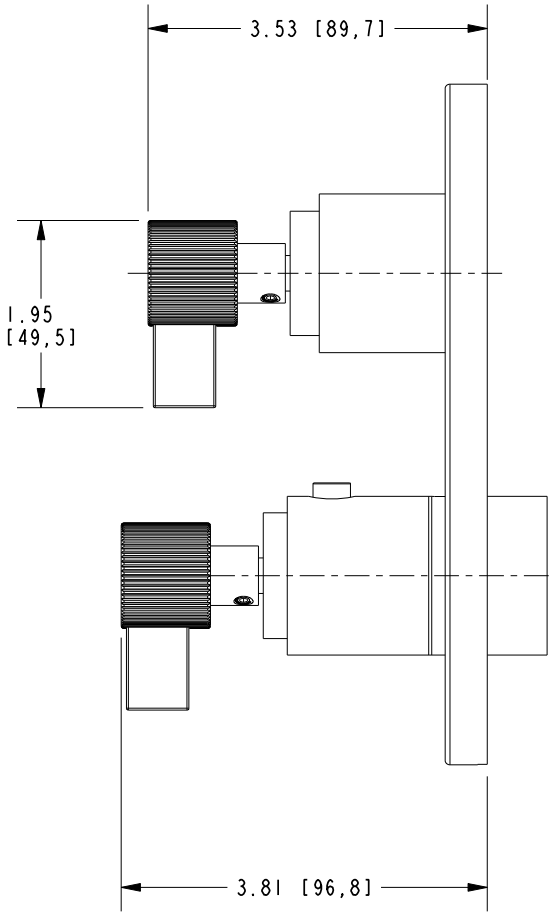

NEWPORT BRASS
Flawless Beauty. From Faucet to Finish.™

t: 949.417.5207 | www.newportbrass.com
©2021 Brasstech, Inc.