NEWPORT BRASS
Flawless Beauty. From Faucet to Finish.™

# SKYLAR

## Wall-Mounted Tub Trim

# 3-2565

## Features

- Solid brass construction
- 9.44" (23.9 cm) spout length
- 1/2” NPT spout inlet fitting
- Rough valve incorporates a brass valve body assembly
- Rough valve incorporates quarter-turn washerless ceramic disc valve cartridges
- Intended for use with Newport Brass rough valve as specified (Required Accessory)
- ADA Compliant

## Codes / Standards Compliance

Meets or exceeds the following at date of manufacture:

- ASME A112.18.1/CSA B125.1-18
- IAPMO/cUPC
- IPC
- ADA & ICC/ANSI A117.1
- All applicable US Federal and State material regulations

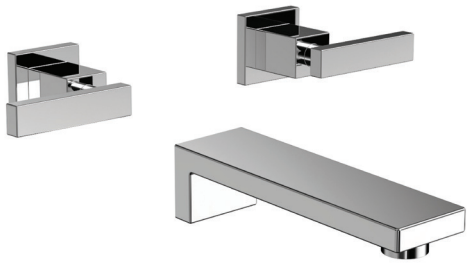

## Colors / Finishes

- 10B: Oil Rubbed Bronze
- 15: Polished Nickel
- 15S: Satin Nickel - PVD
- 26: Polished Chrome
- Other: Refer to the Newport Brass catalog for additional color/finish options.

## Specified Model

| Model | Description | Colors \| Finishes | | | | |
|---|---|---|---|---|---|---|
| 3-2565 | Wall-Mounted Tub Trim | ☐ 10B | ☐ 15 | ☐ 15S | ☐ 26 | ☐ Other |

## Required Accessory

| | |
|---|---|
| Application | Wall Tub Rough Valve |
| Description | 2-Cartridge Assembly |
| Inlet/Outlet Size | 1/2” |
| Part Number | 1-500U |
| Image |  |

## Product Specification Add “Color / Finish” suffix to Model number, below.

The Wall-Mounted Tub Trim shall be made of solid brass construction. Wall-Mounted Tub Trim shall include lever handles and a 9.44" (23.9 cm) tub spout that incorporates a 1/2" NPT inlet fitting.Wall-Mounted Tub Trim shall be Newport Brass Model 3-2565/_____ and Newport Brass rough valve shall be 1-500U.


©2020 Brasstech, Inc.

# 3-2565

Product dimensions are provided for reference only. For specific product installation guidelines, please reference the installation instructions of the product being installed.

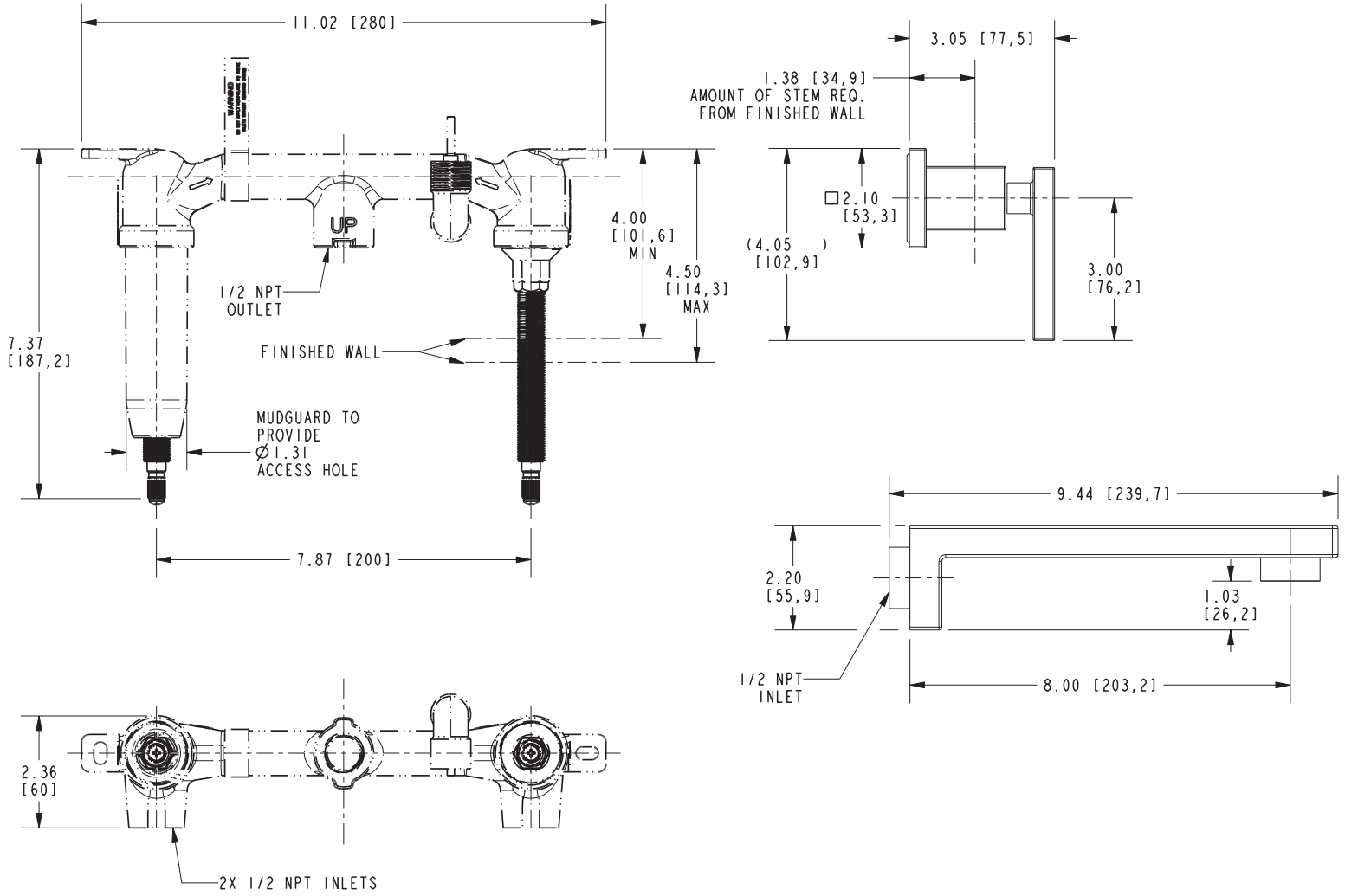





NEWPORT BRASS
Flawless Beauty. From Faucet to Finish.™

t: 949.417.5207 | www.newportbrass.com
©2020 Brasstech, Inc.