NEWPORT BRASS
Flawless Beauty. From Faucet to Finish.

TUB & SHOWER

Features

WALL SUPPLY ELBOW FOR HAND SHOWER HOSE

285-1

Solid brass construction
Wall Supply Elbow
Intended for use with Newport Brass hand showers

Codes / Standards Compliance

Meets or exceeds the following at date of manufacture:

All applicable US Federal and State material regulations

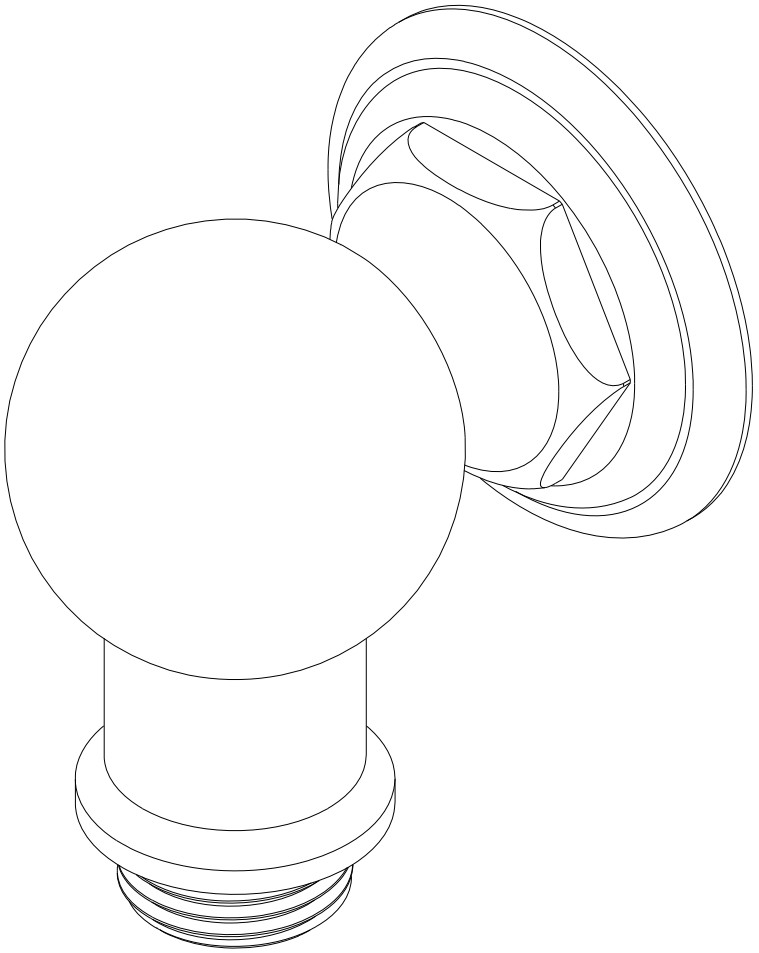

t: 949.417.5207 | www.newportbrass.com
©2025 NewportBrass

285-1

PRODUCT DIMENSIONS *(Units are in inches)*

Product Dimensions are provided for reference only. For specific product installation guidelines, please reference the Installation Instructions of the product being installed.

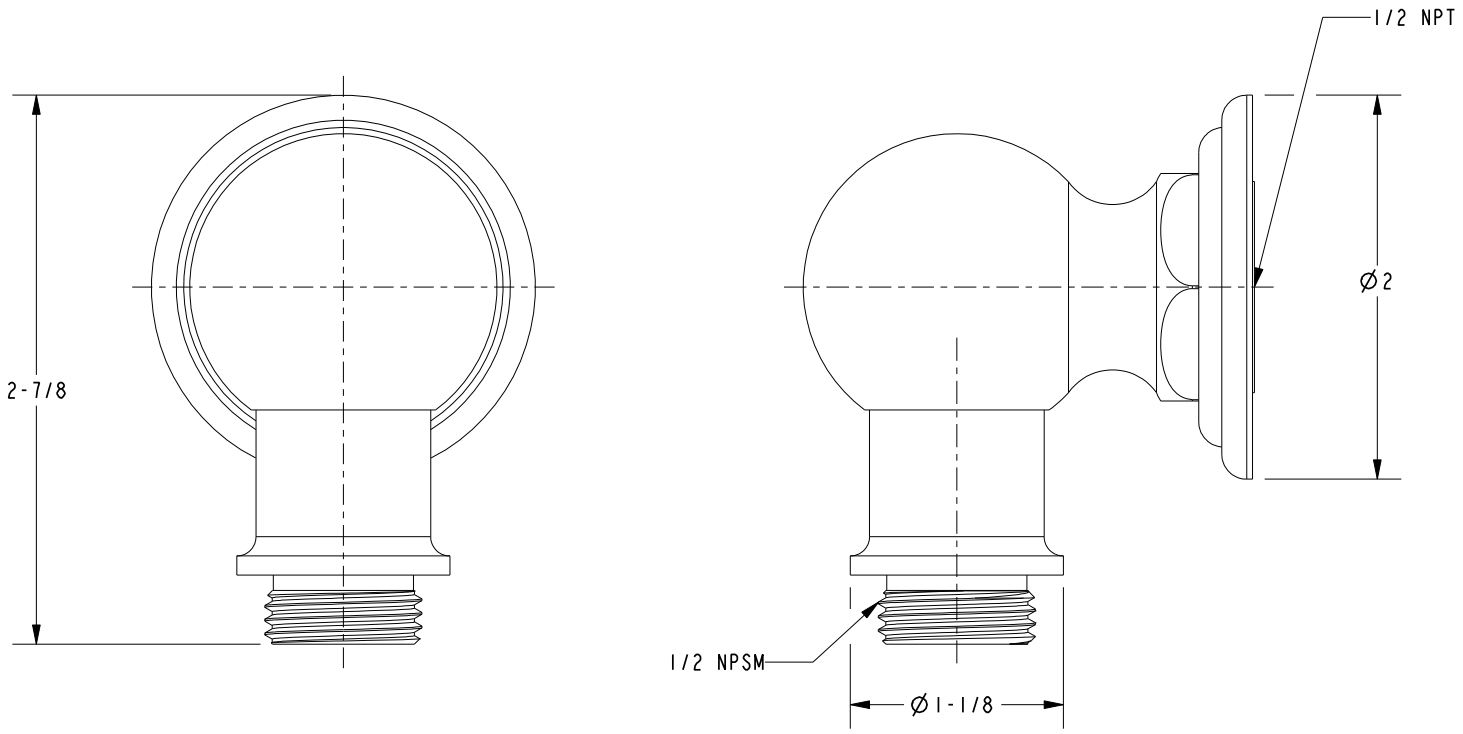

NEWPORT BRASS
Flawless Beauty. From Faucet to Finish.

t: 949.417.5207 | www.newportbrass.com

©2025 NewportBrass