NEWPORT BRASS

EAST LINEAR

PULL-DOWN KITCHEN FAUCET

1500-5113

Features

- Solid brass construction
- Euro-motion ceramic disc 35 mm valve cartridge
- Independent rotational and pivoting lever handle elements
- Two-function, push-button control spray engine with solid brass housing
- Magnetic docking system secures spray engine to spout
- Pivoting-ball spray engine inlet fitting for enhanced directional control
- 9.44" (24.0 cm) spout height at outlet
- 8.54" (21.7 cm) spout reach (c-c)
- ADA compliant (Handles only)
- 1.8 GPM (6.8 LPM) Max

Codes / Standards Compliance

Meets or exceeds the following at date of manufacture:

- ASME A112.18.1/CSA B125.1
- IAPMO/cUPC
- NSF/ANSI/CAN 61, SECTION 9
- NSF/ANSI/CAN 372
- IPC
- ADA & ICC/ANSI A117.1 (Handle only)
- Energy Policy Act of 1992
- California Energy Commission
- ASME A112.18.3 (Back flow) - Double check valves at sprayhead inlet
- All applicable US Federal and State material regulations

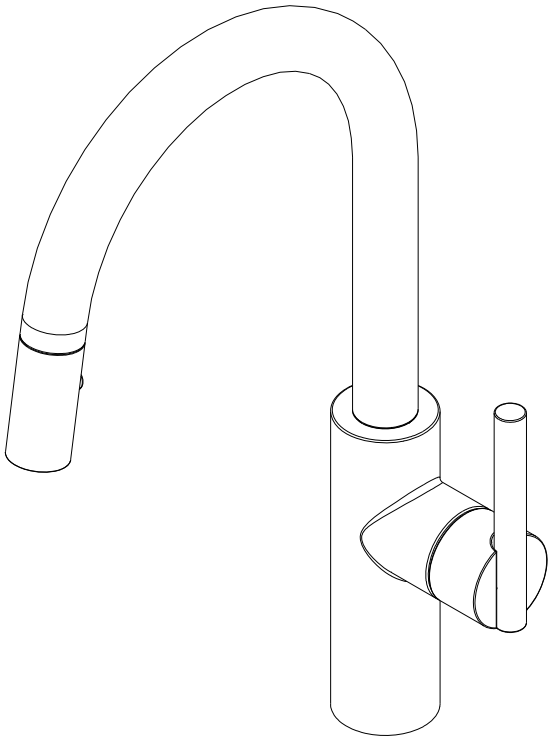

t: 949.417.5207 | www.newportbrass.com

NEWPORT BRASS

PRODUCT DIMENSIONS *(Units are in inches)*

Product Dimensions are provided for reference only. For specific product installation guidelines, please reference the Installation Instructions of the product being installed.

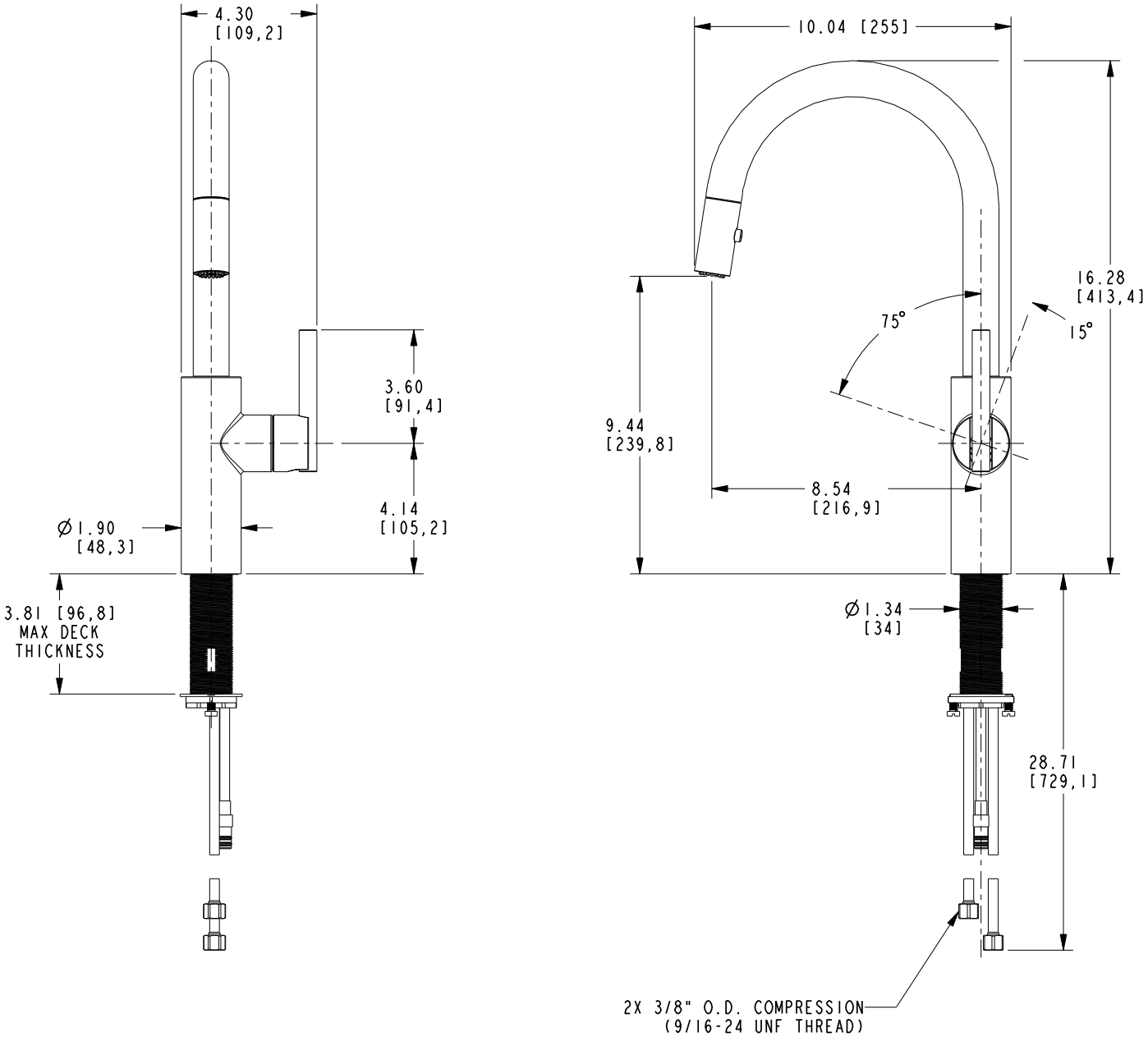

PULL-DOWN KITCHEN FAUCET

1500-5113

Newport Brass reserves the right (1) to make changes in specifications and materials, and (2) to change or discontinue models, both without notice or obligation. See current full-line price book or www.newportbrass.com for finish options and product availability.