NEWPORT BRASS
Flawless Beauty. From Faucet to Finish.™

NEWPORT BATH

Thermo Rough Valve

1-745

Features

- Solid brass construction
- Provides anti-scald protection and temperature regulation
- Integrated shut off function.
- High-temperature safety stop ensures water temperature maximum is 100° F (37.7 C)°
- Built in check valves with service stops
- 1/2” NPT female thread (inlet and outlet) valve body
- 2 way diverter configuration
- Requires Newport Brass LuxTherm® Trim (many options available, sold-separately)

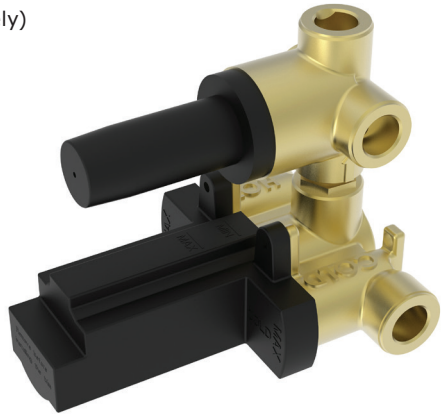

Codes / Standards Compliance

Meets or exceeds the following at date of manufacture:

- ASME A112.18.1/CSA B125.1
- IAMPO/cUPC
- IPC
- California Energy Commission
- ASSE 1016
- All applicable US Federal and State material regulations

Colors / Finishes

- 10B: Oil Rubbed Bronze
- 15: Polished Nickel
- 15S: Satin Nickel - PVD
- 26: Polished Chrome

- Other: Refer to the Newport Brass catalog for additional color/finish options.

Specified Model

Model	Description	Colors | Finishes
1-745	1/2” Thermostat Valve For Shower Installations	☐ NA

Product Specification:

Add "Color / Finish" suffix to Model number, below.

The Thermostat Valve for shower installations shall be made of solid brass construction. Valve shall provide anti-scald protection ensuring water temperature maximum is 100° F (37.7 C)°. Valve inlets shall include integral stops and incorporate 1/2” NPT female thread for inlets and outlet. Valve shall incorporate mounting tabs along the back surface. Thermostat Valve for shower installations shall be Newport Brass Model 1-745.

t: 949.417.5207 | www.newportbrass.com
©2021 Brasstech, Inc.

1-745

Product Dimensions are provided for reference only. For specific product installation guidelines, please reference the Installation Instructions of the product being installed.

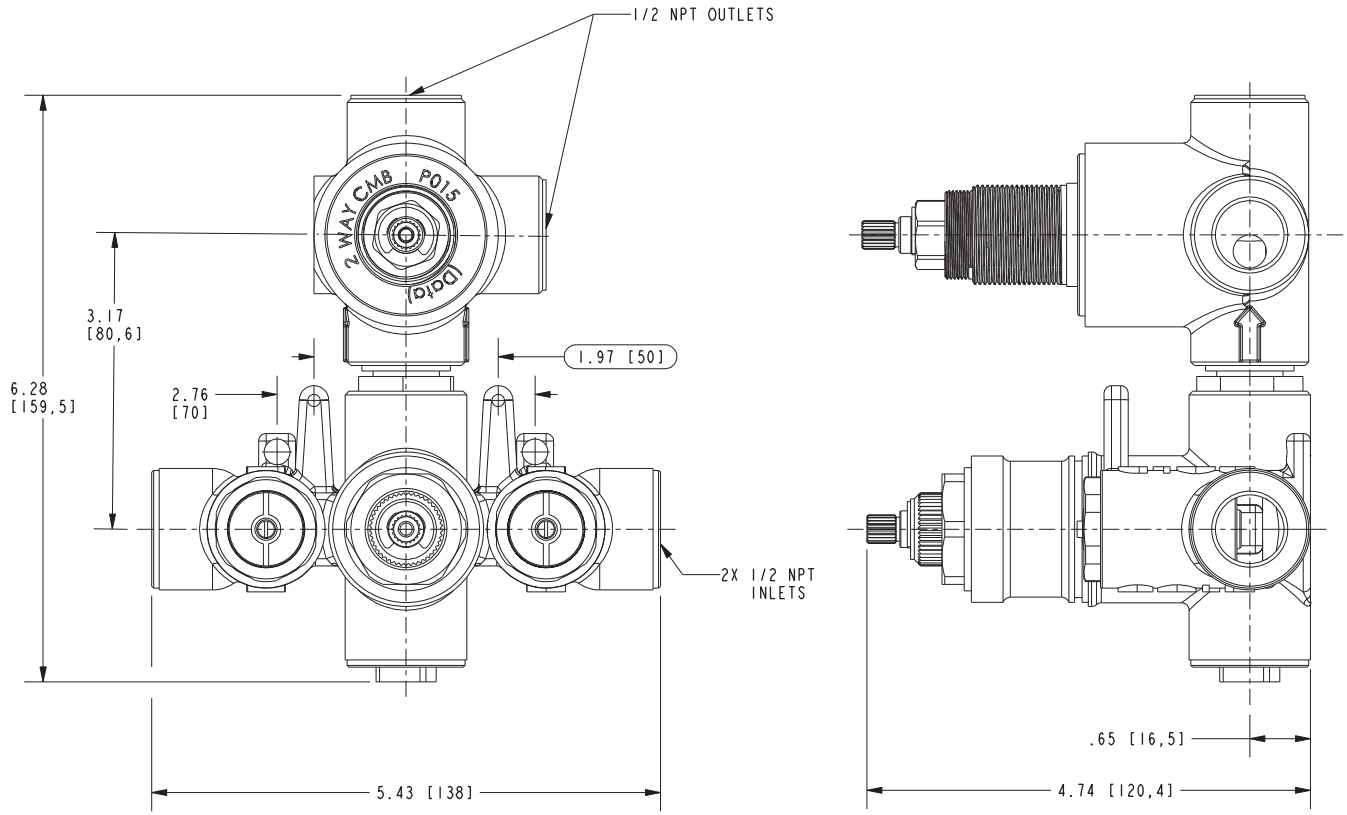

Newport Thermo Rough Valve

1-745

NEWPORT BRASS
Flawless Beauty. From Faucet to Finish.™

t: 949.417.5207 | www.newportbrass.com
©2021 Brasstech, Inc.