Luna 2 shown with a rolled rim

Luna 2

MODEL 721
16" x 5.5"
VESSEL STYLE
SculptureStone®
14 lbs / 6 kg

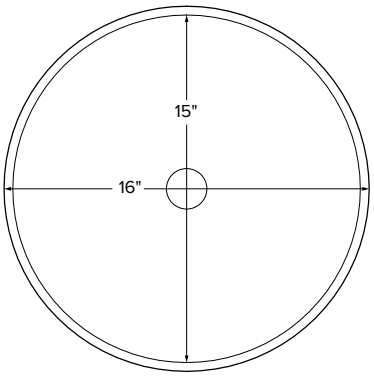

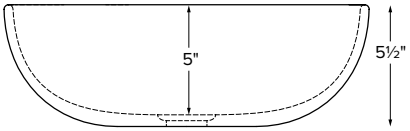

vessel style sink installs on top of the vanity.

Flat rim model is ½" shorter on both inside and outside than rolled rim model (shown above).

Cut-out for drain installation required.

Finish	Part #	Installation	
soft matte white	MTCS721F	flat rim	
	MTCS721RUM	rolled rim	
hand-polished gloss white	MTCS721FGL	flat rim	
	MTCS721RUMGL	rolled rim	

Options
Must be ordered at time of purchase

Biscuit Color Upgrade (SSBISNK) +
Additional material colors available for projects only. Please call MTI.

Exterior Color for **Flat Rim only** (SSCOLSG) Gloss (SSCOLSM) Matte
Must specify color code. *Not available for undermount sinks.*
Sapphire Blue (SB), Blue Lagoon (BL), Terracotta (TC),
Onyx (OX), Stratus Gray (TG), Stormgray (SG)

Quick Ship (QSPRI3) reduces lead time
Please call for availability.

Accessories
Must be ordered at time of purchase

Drain Kits

Finger Touch Drain Without Overflow
Chrome (DKFGCN) Brushed Nickel (DKFGBNN)

Grid Drain Without Overflow
Chrome (DKGDCN) Brushed Nickel (DKGDBNN)

Fixed Drain Without Overflow
Chrome (DKFDC)

ORDERING AND INSTALLATION

- 1.5" drain opening
- One-piece construction
- Non-porous, stain-, mold- and mildew-resistant SculptureStone®
- Material is approximately 70% organic
- Five-Year Limited Residential Warranty

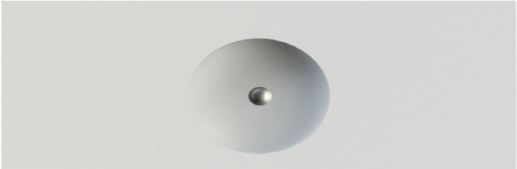

Also available, Luna Counter-Sink 2, featuring custom-size countertop with integrated bowl. Offered in a single or double bowl configuration.

- Before discarding packaging, check for accessories that may be inside.
- All product measurements are ±1/2".
- Specifications and configurations are subject to change without notice.
- Measurements herein supersede all others published prior to publication date below.

CSA # MTCS-721

©2026 by MTI Baths, Inc. Modification Rights Reserved

Rev. 06 02 2026