Brand	hansgrohe
Art. Name	**AddStoris S** Towel Rack with Towel Bar
Art. Nr.	41781140
Surface	Brushed Bronze
Pos.	1

Product Picture

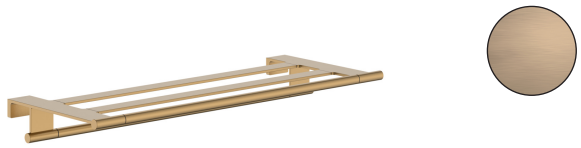

Drawing

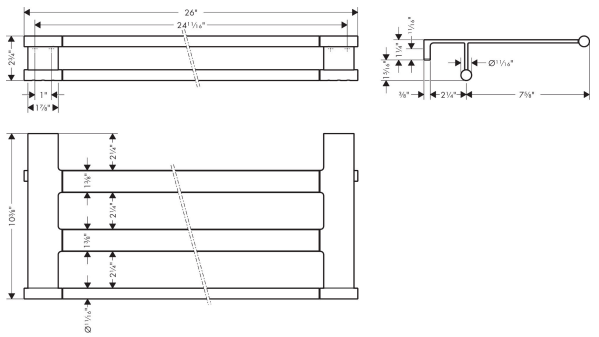

Features

- Wall-mounted
- Metal
- Metal holder
- With mounting material
- Concealed fastening

Technology