PRODUCT SHEET

MONARCH 6036

60" x 36" x 20"

Monarch is a refined collection of therapeutic baths with distinctive Quartz deck surfaces, for a look that's noble and pure.

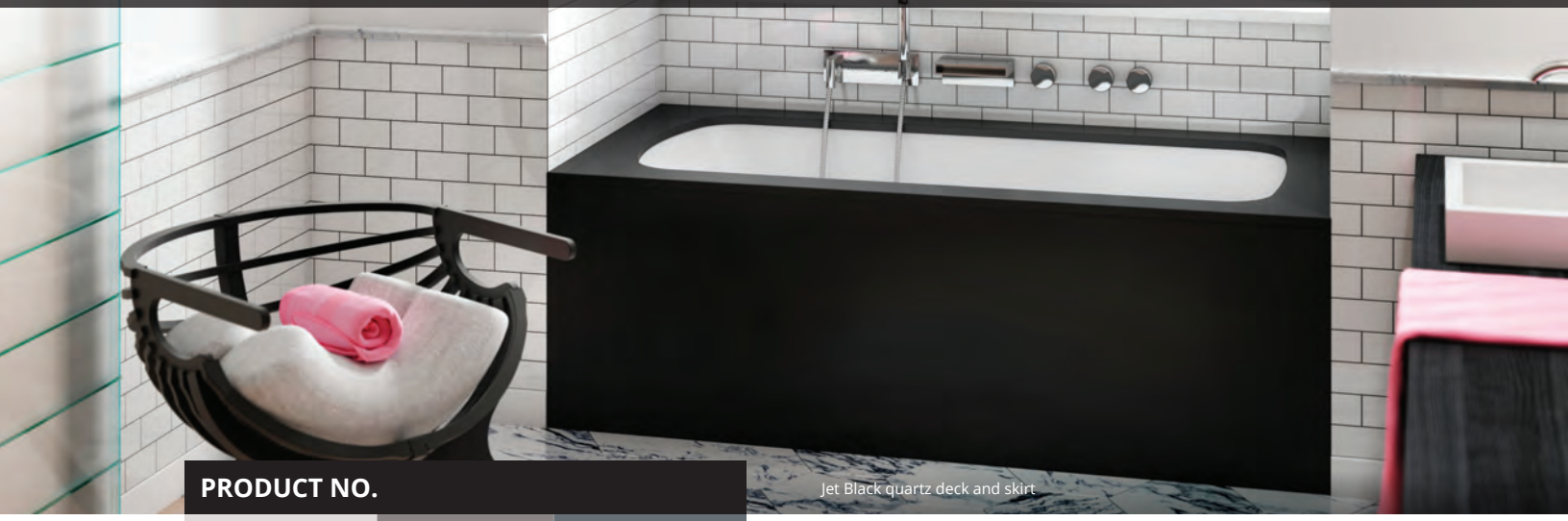

Jet Black quartz deck and skirt

PRODUCT NO.

MODEL	TMU	TUB
Standard (S)*	BMOFRB00T-XX	BMOFRB00N-XX
Grand Luxury (GL)*	BMLFRB00T-XX	BMLFRB00N-XX

THERMOMASSEUR (TMU) Hydro-thermo massage • Air jet system	S $	GL $
Jets		40
1 heated backrest		Included
MiaPlus® Control (not installed)		Included
BU-Touch Control Application BUTOUCH	$	
Geysair®		Included
AromaCloud®		N/A
Illuzio Chromatherapy BCHRO6	$	

TUB Soaker	S $	GL $
AromaCloud®		N/A
Illuzio Chromatherapy BCHRO6	$	
WarmTouchShell® BWTS	$	
DOT control		Included with therapy

FEATURES

Installation type		Drop-in & Alcove (3 walls)	
No. of bathers	1	Imp. gallons	40
US gallons	48		

INTEGRATED WASTE & OVERFLOW BOVERINI-XX	
White 01, Chrome 07, Brushed Nickel 09, Polished Nickel 10, Matte White with UltraVelour finish 32	Installed & Included

STANDARD COLOR (inner shell)	
White 01	Included

QUARTZ DECK COLOR	S* BDMO6036-XX	GL* BDML6036-XX
Grey Expo 21, Jet Black 23, Lagos Blue 24	Included	Included

OPTIONS (UPCHARGE APPLICABLE)

QUARTZ DECK COLOR	S* BDMO6036-XX	GL* BDML6036-XX
Quasar Light 25	$	$
Piatra Grey 26, Bianco Drift 31, Woodlands 30	$	$
Statuario Maximus 29	$	$

FINISH (inner shell)	
UltraVelour Matte Finish (white only) BVEL1	$

QUARTZ SKIRT 6018 (60" x 18 7/8") BSM6018-XX	
Grey Expo 21	$
Jet Black 23, Lagos Blue 24	$
Quasar Light 25	$
Piatra Grey 26, Bianco Drift 31, Woodlands 30	$
Statuario Maximus 29	$

TILE FLANGE (specify right or left)	
Ordered with bath (not installed) BTILEN	$
Factory-installed. Right BTILER, Left BTILEL, Special installation BTILEO	$

INTEGRATED WASTE & OVERFLOW BOVERINI-XX	
Matte Black 19, Satin Brass 18	$

WASTE & OVERFLOW 16" x 35" BOVER16-XX	
Chrome 07	$
White 01	$
Brushed Nickel 09, Polished Nickel 10, Oil-rubbed Bronze 11	$

IF REQUIRED BY CONSTRUCTION CODE	
Brass waste & overflow kit** BDRCOB	$
Brass waste kit** BDRCB	$
16" x 35" Cable driven brass waste & overflow kit BOVERBR	$

MONARCH 6036

Bianco Drift quartz deck

INSTALLATION

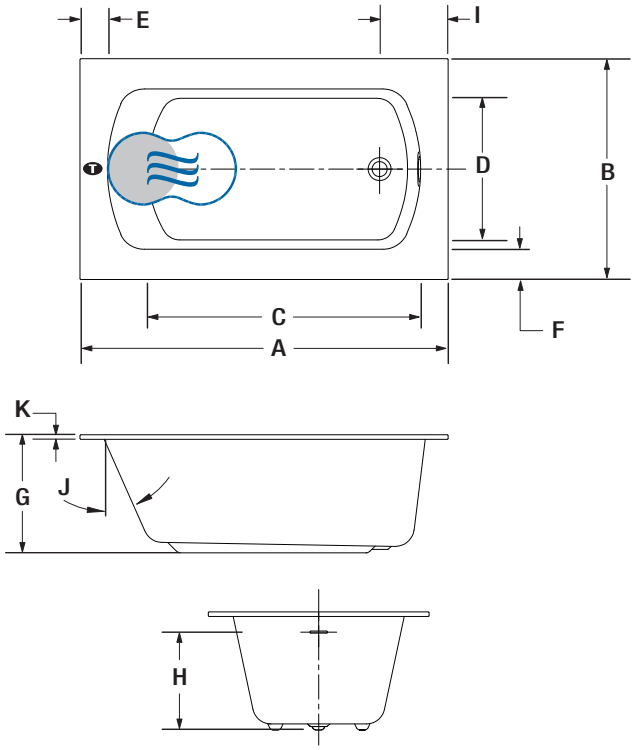

LETTER	DESCRIPTION	MEASURE
A	Total length	60"
B	Total width	36"
C	Bathing well length (at height of jets)	42 3/8"
D	Bathing well width (at height of jets)	22 3/4"
E	Deck width (edges)	4 5/8"
F	Deck width (sides)	5 1/8"
G	Bath height	19 7/8"
H	Height from drain to center of overflow	15 3/8"
I	Outside edge to center drain	11 1/8"
J	Slope of backrest	24°
K	Quartz deck height	3/4"

T Turbine position (TMU)

Indicates heated backrest (TMU)

Indicates WarmTouchShell® position (TUB)

Don't forget that this model is available in **White only with choice of quartz deck color**. Don't forget to specify the **finish of the integrated waste & overflow**.
* Standard: Quartz deck with seam. Grand Luxury: one piece Quartz deck.
** When ordered with integrated waste & overflow.

TOTAL PRICE **$**

TECHNICAL SPECIFICATIONS

Hot water supply required	The hot water supply should be 70% or more of the bath's total water capacity.
Turbine	Access to the pump must be at least 18" x 22". **Standard connection is 20 A. 120 V, 60 hz**, dedicated line with a Ground-Fault Circuit Interrupter (GFCI). **For any additional option, a second line is needed 15 A. 120 V, 60 hz**, dedicated line with a GFCI.
Others	- The Geysair is located on the same side as the heated backrest. It must **NOT be relocated**. It must be **connected to the hot water supply** and be accessible (provide access). - Control cannot be installed on the Quartz deck. - Optional tile flange (specify right or left).

Our products must be installed by certified professionals only and according to our Monarch Installation Manual as well as federal, provincial/state and local building codes and regulations (www.bainultra.com/documentation/documentation).

Approx. shipping weight	244 lbs
Turbine power	550 W
Air heater	600 W
WARRANTY	
Controls–LED–Geysair*	5 years
Quartz deck*	15 years
Bath & turbine*	20 years

* Some restrictions apply | www.bainultra.com/warranty

The specifications shown indicate the outer edge dimension and the inside bathing capacity dimension measured at air jets' height. The manufacturer accepts a 1/4" [0.64 cm] variance. There are variations on each product and specifications are subject to change as we improve upon our product as required. The dimensions needed for site preparation and structure building will differ. BainUltra® assumes no responsibility for preparatory work done prior to the product being on site.

Copyright © March 2023 | Bains Ultra Inc. All rights reserved.