EVANESCENCE 5936

59" x 36" x 28" (FREESTANDING)

Evanescence means "state of transformation." The collection is an invitation to turn your relaxation space into a sanctuary of luxury and wellness.

PRODUCT NO.

MODEL	TMU	TUB
Freestanding	BEVFOF00T-XX	BEVFOF00N-XX

THERMOMASSEUR (TMU) Hydro-thermo massage • Air jet system	$
Jets	35
1 heated backrest & headrest	Included
MiaPlus® Control*	Included
BU-Touch Control Application	Included
Geysair®	Included
AromaCloud®	N/A
Illuzio Chromatherapy BCHRO6	$

TUB Soaker	$
AromaCloud®	N/A
Illuzio Chromatherapy BCHRO6	$
WarmTouchShell® BWTS	$
DOT control	Included with therapy

FEATURES			
Installation type			Freestanding
No. of bathers		Imp. gallons	41
US gallons	49	Raised headrest	1
INTEGRATED WASTE & OVERFLOW BOVERINI-XX			
White 01, Chrome 07, Brushed Nickel 09, Polished Nickel 10, Matte White with UltraVelour finish 32			Installed & Included
STANDARD COLOR			
White 01			Included

OPTIONS (UPCHARGE APPLICABLE)	
COLOR	
Black / White 66	$
FINISH	
UltraVelour Matte Finish (white only) BVEL2	$
UNIVERSAL ARMRESTS BGBGU-XX **NEW**	
White 01	$
INTEGRATED WASTE & OVERFLOW BOVERINI-XX	
Matte Black 19, Satin Brass 18	$
ISLAND TUB DRAIN™**	
Island Tub Drain™ BISLDD	$
Cast Iron Island Tub Drain™ BISLDDCI	$
IF REQUIRED BY CONSTRUCTION CODE	
Brass waste & overflow kit BDRCOB	$
Brass waste kit BDRCB	$

Don't forget to specify the **finish of the integrated waste & overflow**.
* For TMU, control must be wall-mounted. Faucets must be freestanding or wall-mounted.
** An Island Tub Drain™ is required when there is **no access under the bath**.

TOTAL PRICE $

FOR THE INSTALLER

SCAN TO VIEW INSTALLATION VIDEO (3:20 MIN)

EVANESCENCE 5936 (FREESTANDING)

INSTALLATION

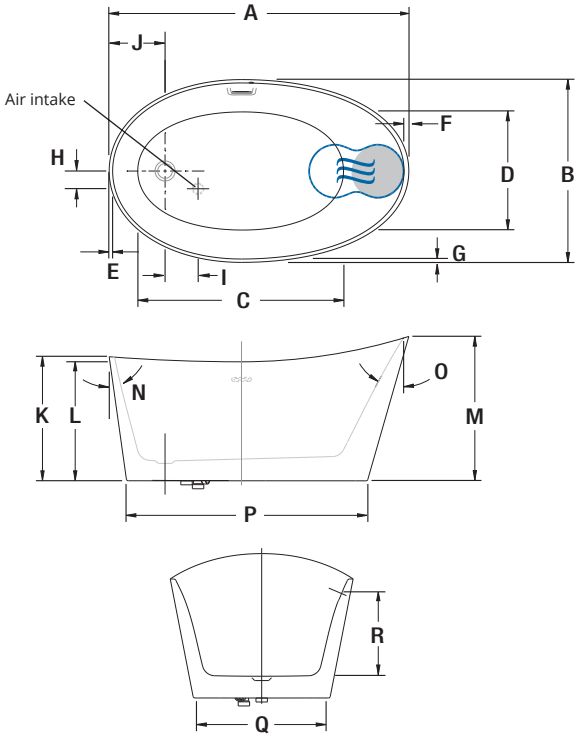

LETTER	DESCRIPTION	MEASURE
A	Total length	59"
B	Total width	36"
C	Bathing well length	41 1/2"
D	Bathing well width	23 7/8"
E	Deck width at drain end	1"
F	Deck width at headrest	1 1/8"
G	Deck width	1 1/8"
H	Center bath drain to air intake	3 1/2"
I	Center bath drain to air intake	6 1/2"
J	Outside edge to center bath drain	11"
K	Total height	24 1/2"
L	Minimum height of bath	23 1/2"
M	Total height to headrest	28 1/2"
N	Slope at drain end	12°
O	Slope of backrest	31°
P	Base length	47 3/8"
Q	Base width	26 7/8"
R	Height from drain to center of overflow	16"

● Indicates heated backrest (TMU)

≋ Indicates WarmTouchShell® position (TUB)

TECHNICAL SPECIFICATIONS

Hot water supply required	The hot water supply should be 70% or more of the bath's total water capacity.
Turbine	Access to the pump must be at least 18" x 22". **Standard connection is 20 A. 120 V, 60 hz**, dedicated line with a Ground-Fault Circuit Interrupter (GFCI). **For any additional option, a second line is needed 15 A. 120 V, 60 hz**, dedicated line with a GFCI. Air vent necessary: 2" x 4" minimum.
Others	- The Geysair is located on the same side as the heated backrest. It must **NOT be relocated**. It must be **connected to the hot water supply** and be accessible (provide access). - Faucet must be freestanding or wall-mounted. - The turbine must be **remotely installed**. - Controls cannot be installed on the bath.

Our products must be installed by certified professionals only and according to our Owner's Manual as well as federal, provincial/state and local building codes and regulations (www.bainultra.com/documentation/documentation).

Cutting template	# 90000069
Approx. shipping weight	220 lbs
Turbine power	550 W
Air heater	600 W
WARRANTY	
Controls–LED–Geysair*	5 years
Bath & turbine*	20 years

* Some restrictions apply | www.bainultra.com/warranty

The specifications shown indicate the outer edge dimension and the inside bathing capacity dimension measured at air jets' height. The manufacturer accepts a 1/4" [0.64 cm] variance. There are variations on each product and specifications are subject to change as we improve upon our product as required. The dimensions needed for site preparation and structure building will differ. BainUltra® assumes no responsibility for preparatory work done prior to the product being on site.

Copyright © March 2023 | Bains Ultra Inc. All rights reserved.