# SAMUEL HEATH

**Product Number:** V6KA42XB
**Description:** Side valves for overflow filler (pair)



## Standards

LP Min 7.3 psi

## Flow rates

| | 1.5 PSI | 7.3 PSI | 14.5 PSI | 29.0 PSI | 43.5 PSI | 58.0 PSI | 72.5 PSI |
|---|---|---|---|---|---|---|---|
| Gallons/Min | | 8.5 | 12.3 | 13.7 | 18.8 | 24.3 | 26.7 |

Flow rate data provided is indicative of each product and is given in open outlet conditions. Installation design, external connections and fittings not supplied may affect the data provided.

## Finishes Available

City Bronze
Country Bronze
Old Brass Matt
Antique Brass Matt
Antique Brass Gloss
Amber Brass
Anthracite
Brushed Gold Matt
Brushed Gold Gloss
Antique Gold
Polished Nickel
Brushed Nickel
Brushed Gold Unlacquered
Non Lacquered Brass
Chrome Plate

## Control Options Available



## Specification Drawing

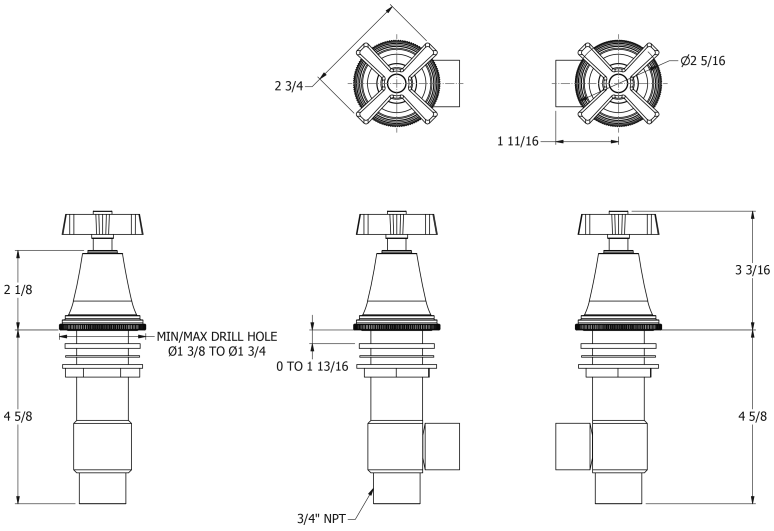


**UK Customer Service**
Leopold Street
Birmingham
B12 0UJ
Tel: +44 121 766 4200
Email: info@samuel-heath.com

**US Customer Service**
Email: usa@samuel-heath.com

**Specification Enquiries**
Design Centre Chelsea Harbour
1st Floor, North Dome, London
SW10 0XE
Tel: 020 7352 0249
Email: showroom@samuel-heath.com