SAMUEL HEATH

Product Number: V646
Description: Wall mounted spout, trim set



Standards

LP Min 7.3 psi

Flow rates

	1.5 PSI	7.3 PSI	14.5 PSI	29.0 PSI	43.5 PSI	58.0 PSI	72.5 PSI
Gallons/Min		0.7	1.1	1.8	2.1	2.4	2.7

Flow rate data provided is indicative of each product and is given in open outlet conditions. Installation design, external connections and fittings not supplied may affect the data provided.

Finishes Available

City Bronze
Country Bronze
Old Brass Matt
Antique Brass Matt
Antique Brass Gloss
Amber Brass
Anthracite
Brushed Gold Matt
Brushed Gold Gloss
Antique Gold
Polished Nickel
Brushed Nickel
Brushed Gold Unlacquered
Non Lacquered Brass
Chrome Plate

Specification Drawing

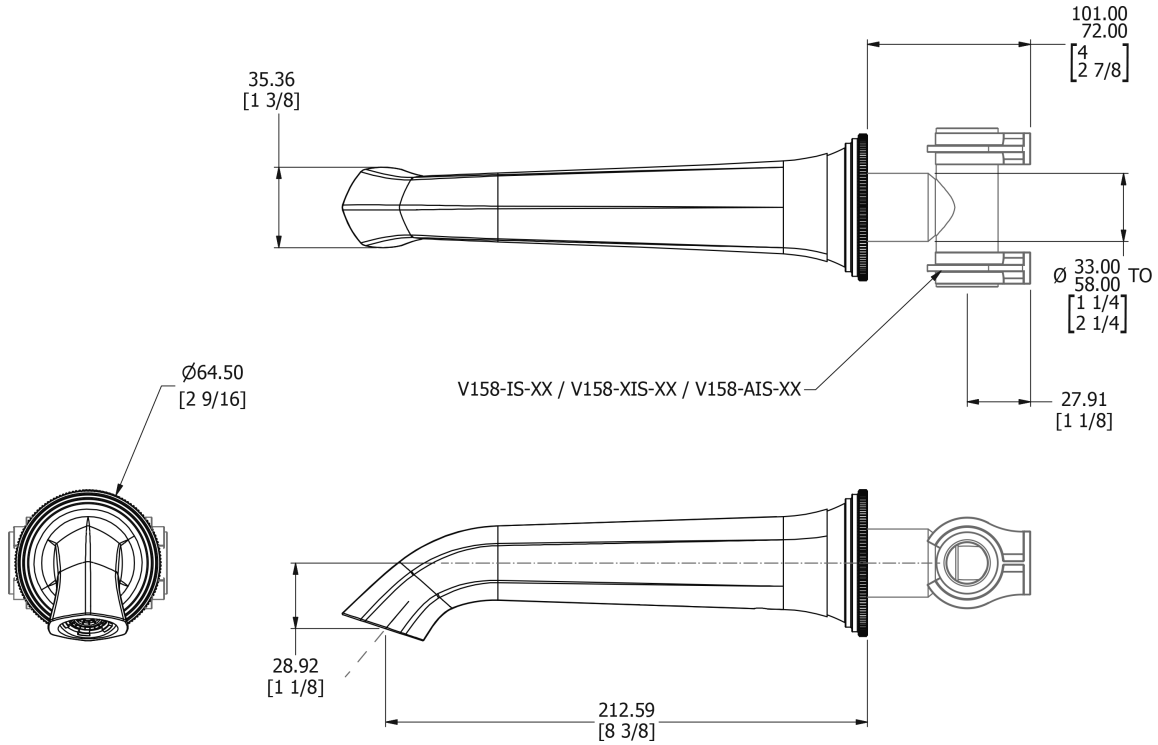

UK Customer Service
Leopold Street
Birmingham
B12 0UJ
Tel: +44 121 766 4200
Email: info@samuel-heath.com

US Customer Service
Email: usa@samuel-heath.com

Specification Enquiries
Design Centre Chelsea Harbour
1st Floor, North Dome, London
SW10 0XE
Tel: 020 7352 0249
Email: showroom@samuel-heath.com