SAMUEL HEATH

Product Number: V6KA14XNP

Description: 3 Hole lavatory filler without pop-up waste



Standards

Flow rates

	1.5 PSI	7.3 PSI	14.5 PSI	29.0 PSI	43.5 PSI	58.0 PSI	72.5 PSI
Gallons/Min		0.4	0.7	1.0	1.1	1.1	1.1

Flow rate data provided is indicative of each product and is given in open outlet conditions. Installation design, external connections and fittings not supplied may affect the data provided.

Finishes Available

City Bronze | Country Bronze | Old Brass Matt | Antique Brass Matt | Antique Brass Gloss | Amber Brass | Anthracite | Brushed Gold Matt | Brushed Gold Gloss | Antique Gold

Polished Nickel | Brushed Nickel | Brushed Gold Unlacquered | Non Lacquered Brass | Chrome Plate

Control Options Available



Specification Drawing

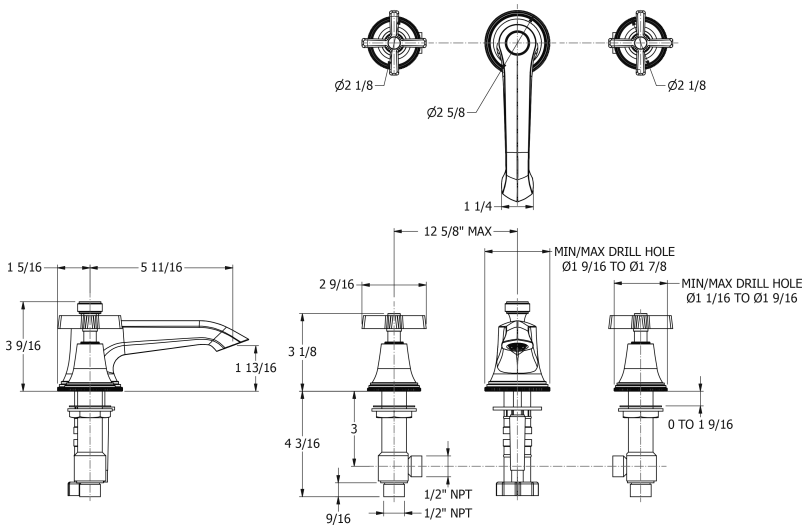

UK Customer Service
Leopold Street
Birmingham
B12 0UJ
Tel: +44 121 766 4200
Email: info@samuel-heath.com

US Customer Service
Email: usa@samuel-heath.com

Specification Enquiries
Design Centre Chelsea Harbour
1st Floor, North Dome, London
SW10 0XE
Tel: 020 7352 0249
Email: showroom@samuel-heath.com