ELKAY
SPECIFICATIONS

4" Centerset Deck Mount Faucet with Gooseneck Spout and Clear Crystalac Handles Chrome
Model(s) LKA2475LF

PRODUCT SPECIFICATIONS

4" Centerset Deck Mount Faucet with Gooseneck Spout and Clear Crystalac Handles Chrome. Faucet has a flow rate of 1.5 GPM, and is made of Chrome-plated Brass material, with a Ceramic Disc valve. Faucet requires 2 faucet holes.

Mounting Type:	Deck Mount
Special Features:	Low Flow
Finish:	Chrome (CR)
Handle Type:	Clear Crystalac Handle
Deck Clearance:	4-7/16"
Spout Reach:	3-7/16"
Spout Height:	8"
Hole Drillings:	2
Material:	Chrome-plated Brass
Valve Type:	Ceramic Disc
Valve Connection:	1/2"-14 NPSM
Flow Rate:	1.5 GPM
Faucet Hole Size (min):	1-1/2"
Faucet Hole Spread:	4
Countertop Thickness:	7/8
Spout Swing Rotation:	360°
Spout Type:	Standard Spout


Chrome
(CR)



A Century of Tradition and Quality.
For more than 100 years, Elkay has been making innovative products and providing exceptional customer care. We take pride in offering plumbing products that make life easier, inspire change and leave the world a better place.

Product Compliance: ASME A112.18.1/CSA B125.1
CEC
NSF 372 (lead free)
NSF 61 (Q≤1)

Clean and Care Manual (PDF)
Installation Instructions (PDF) - LKA2475LF
Warranty (PDF)

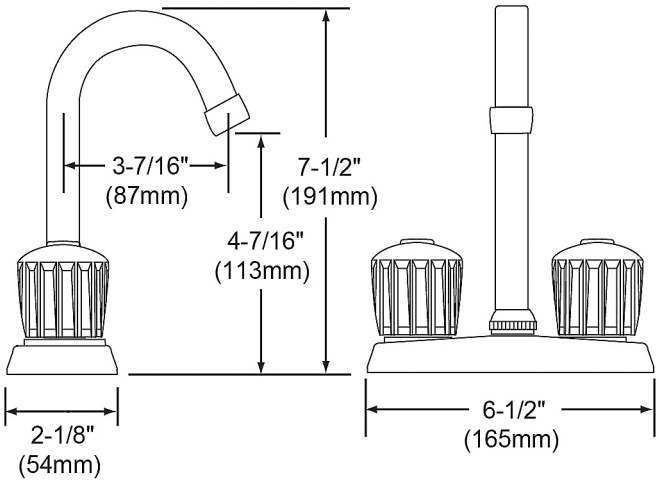

PART:_____QTY: _____
PROJECT:_____
CONTACT:_____
DATE:_____
NOTES:_____
APPROVAL:

In keeping with our policy of continuing product improvement, Elkay reserves the right to change product specifications without notice. Please visit elkay.com for the most current version of Elkay product specification sheets. This specification describes an Elkay product with design, quality, and functional benefits to the user. When making a comparison of other producers' offerings, be certain these features are not overlooked.

In keeping with our policy of continuing product improvement, Elkay reserves the right to change product specifications without notice. Please visit elkay.com for the most current version of Elkay product specification sheets. This specification describes an Elkay product with design, quality, and functional benefits to the user. When making a comparison of other producers' offerings, be certain these features are not overlooked.