G-19208A
Towel Ring

Available Finishes
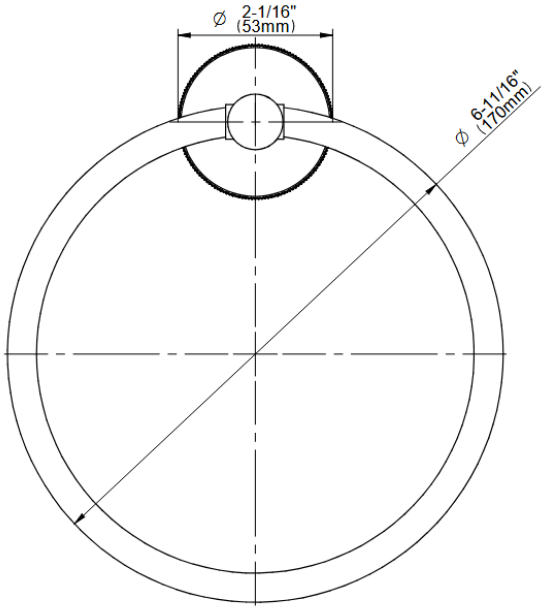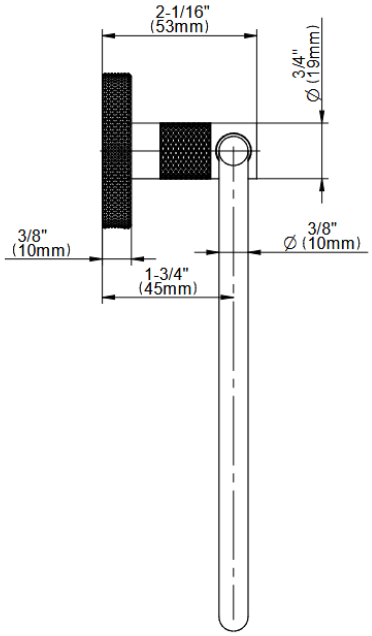
G-19208A
Towel Ring