G-19206
Tissue Holder

Code compliance

- ADA

Available Finishes
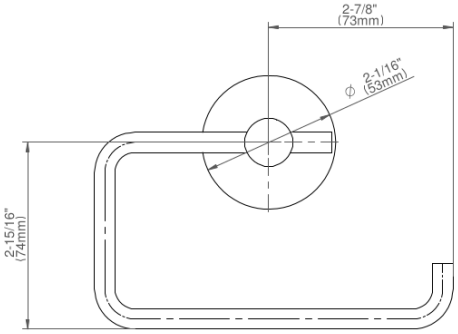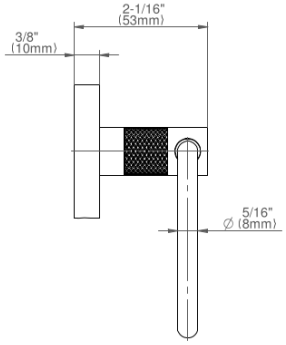
G-19206
Tissue Holder