FAUCET SPECIFICATIONS

Single Hole Bathroom Faucet
Model VG01008

MODEL VG01008

FEATURES

· Solid brass construction
· Single hole construction
· Ceramic disk cartridge
· Single lever faucet
· Standard plumbing connections
· Finish resist corrosion and tarnishing

PACKING LIST

· Faucet Assembly
· Rubber washer
· Steel washer
· Two Metal braided hoses
· Pin
· Nut
· Rubber ring
· Ring

DIMENSIONS

MODEL #	FAUCET HEIGHT	SPOUT REACH	HOLE DIAMETER
VG01008	8 3/4"	4"	1 3/8"

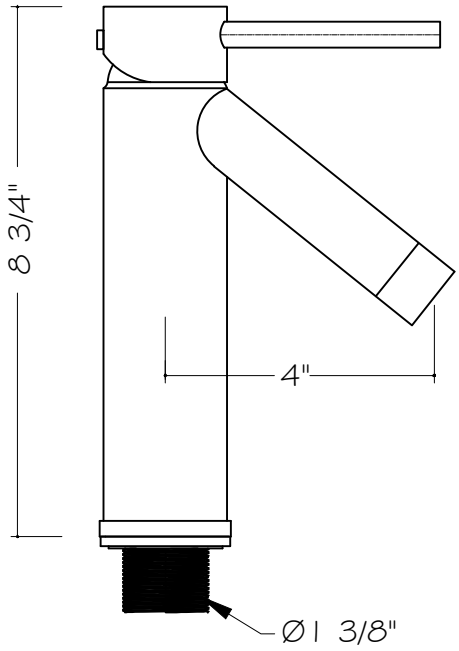

NOTE: All faucets are compliant to CEC 2016 regulations. If you have inquiries about your water flow, please email techmail@vigoindustries.com.