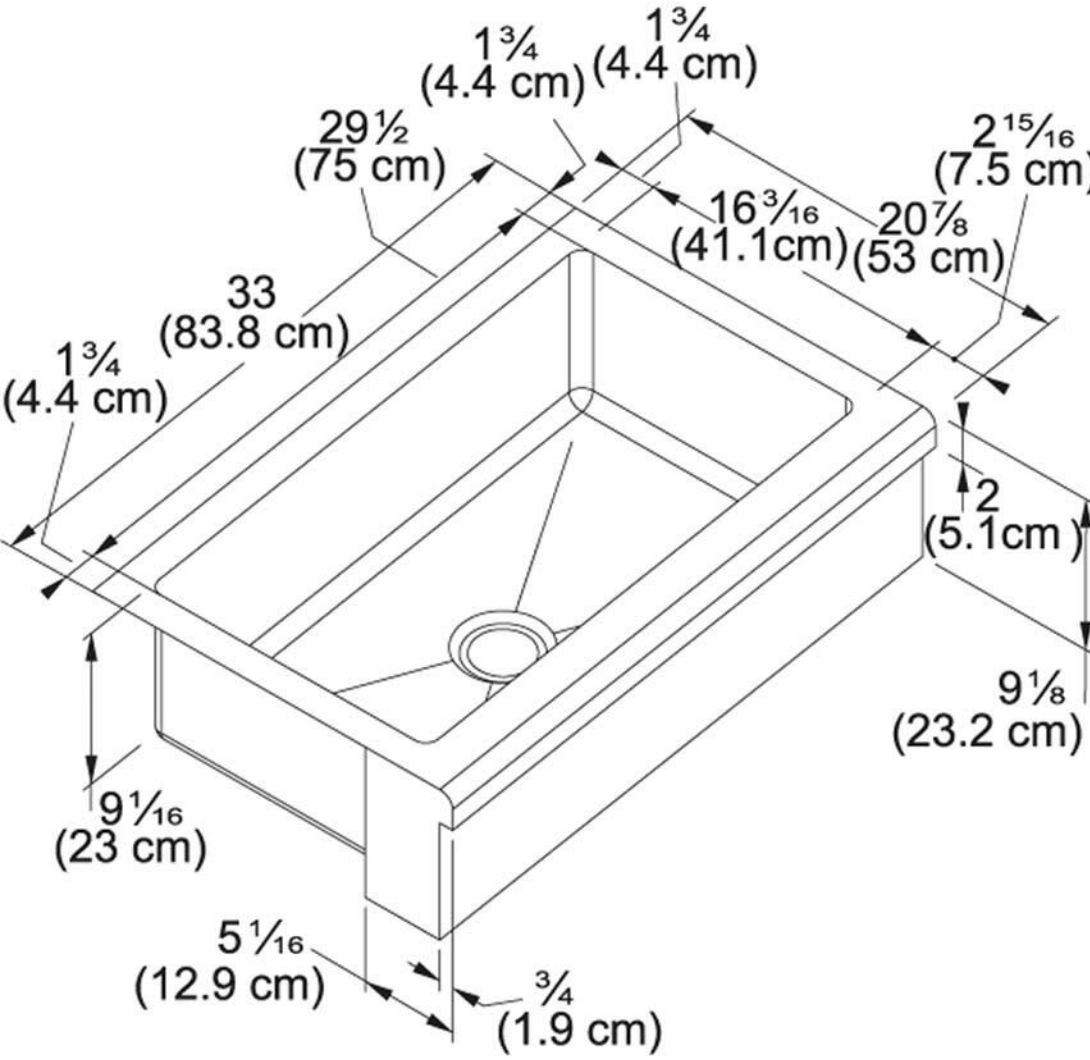
1¾
(4.4 cm)
1¾
(4.4 cm)
29½
(75 cm)
2 15⁄16
(7.5 cm)
16 3⁄16
(41.1cm)
20⅞
(53 cm)
33
(83.8 cm)
1¾
(4.4 cm)
2
(5.1cm)
9⅛
(23.2 cm)
9 1⁄16
(23 cm)
5 1⁄16
(12.9 cm)
¾
(1.9 cm)