MADELI

Functional Elegance

Model Number
B600-42-001-XX

Metro - 42"

Specification & Installation Guide

Features

- Free standing 42" vanity : 33"(838mm)H x 22"(560mm)D x 41-5/8" (1058mm)W
- Furniture grade plywood layered with solid wood veneer and protected with several coats of polyurethane (No particle board or MDF used)
- Matching finish inside out
- Two fully adjustable drawers with full-extension soft-close European hardware
- Drawers include adjustable tempered glass dividers and retainers
- Feet option: 4 L-feet or 2 S-feet in polished chrome or brushed nickel.

Colors/Finishes

- Ash Grey (AG)
- Glossy White (GW)
- Walnut (WA)

Top/Basin options

- White, Soft Grey or White Carrara Quartzstone™ top & White ceramic basin
- Glossy White X-Stone top/basin
- Glossy or Matte White X-Stone flat countertop
- Tempered glass top and ceramic basin

Package Dimensions

46"x 26"x 30"

Weight

192 lbs. / 88 kgs

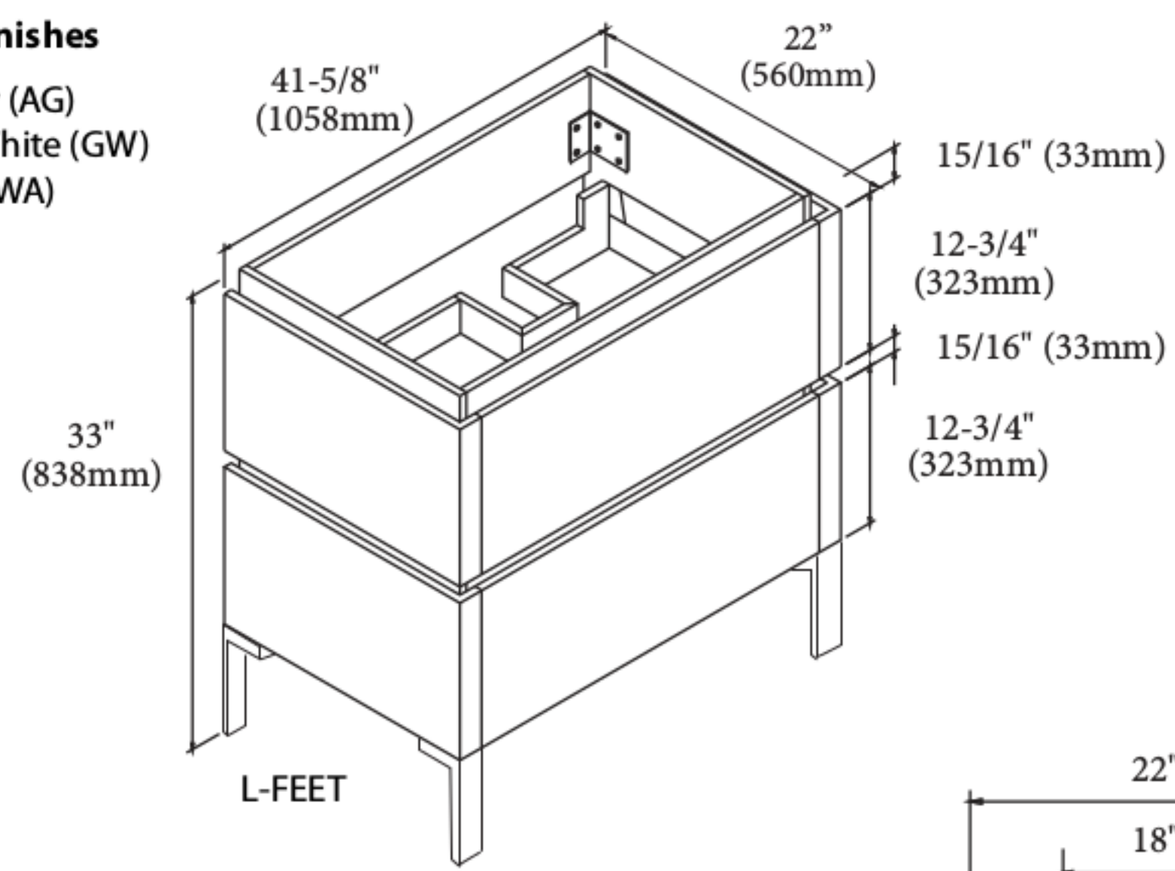

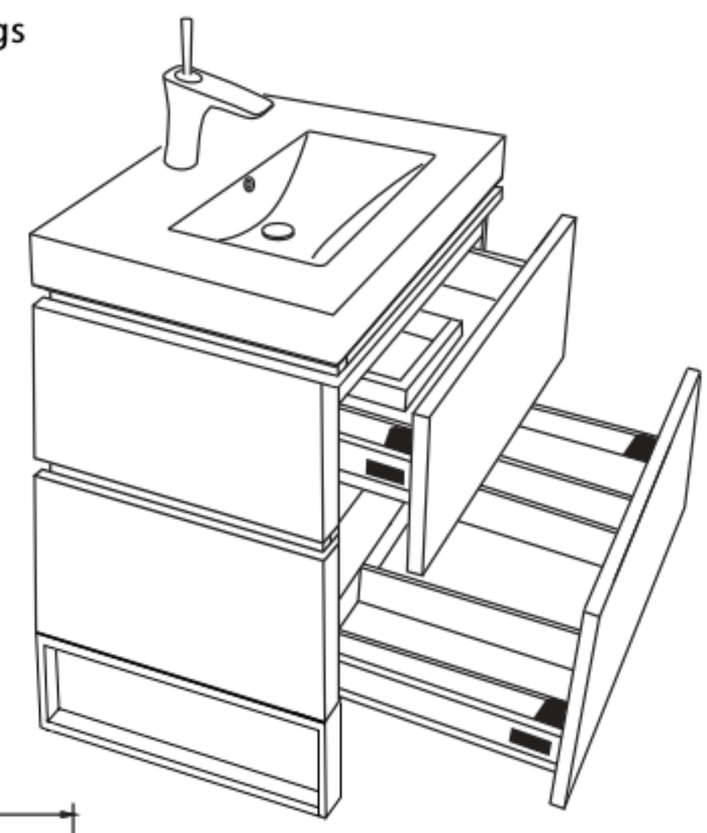

SIDE VIEW

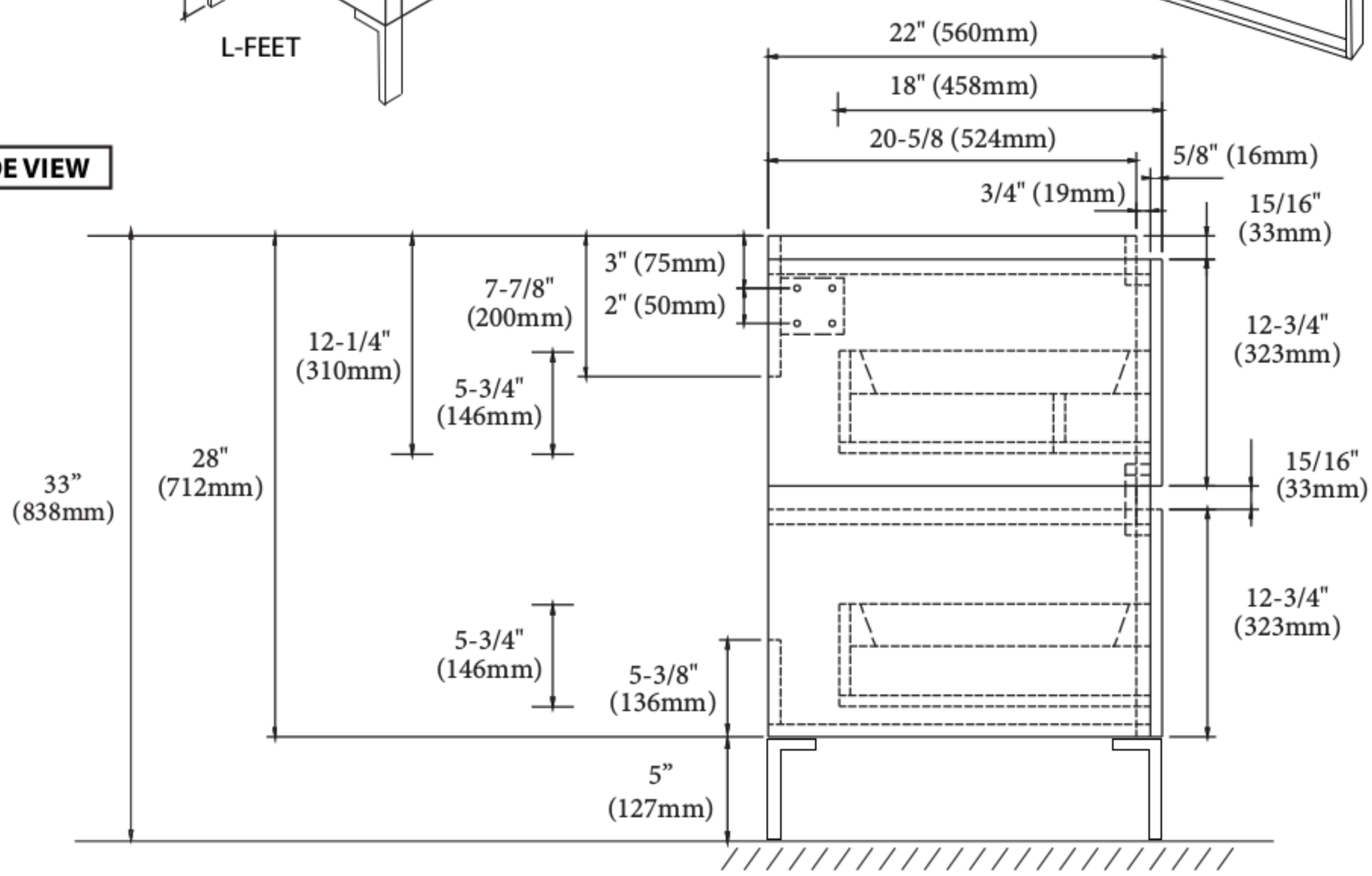

For clarification, please contact Madeli Customer Care at (800)-819-6988 or (305)-718-8817 Ext. 1

All dimensions are approximate and subject to standard tolerance. Specifications subject to change without prior notice.

Madeli, USA LLC | 9710 NW 110th Ave., Suite 1 | Miami , FL 33178 | madeli.com
Tel: 305-718-8817 | Fax: 305-718-8477 | Toll Free: 1-800-819-6988

SIG-B60042 Rev. 070116

All Rights Reserved - 2016