# PSSSB2048 WIRE GRID

Cat. No.

PSSSB2048-WIRE

BARCLAY

## Features:

►Fits bottom of PSSSB2048 prep sink
►Rubber Feet Covers Included

**Finishes:**

**SS** Stainless Steel

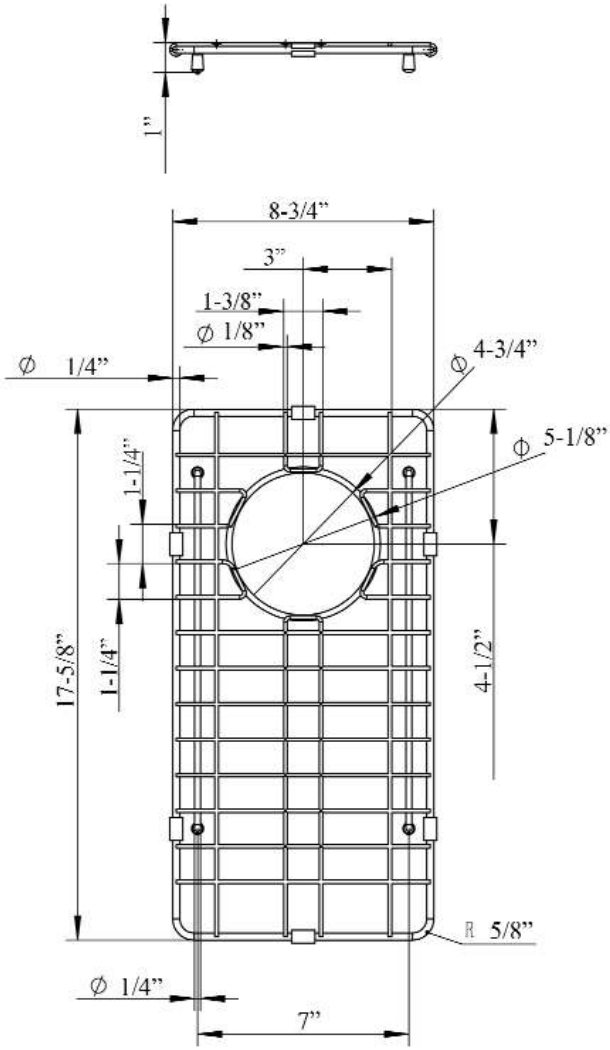


W: 8-¾"
D: 17-⅝"
H: 1"

Drain Hole : 4-¾"

WARNING: This product can expose you to chemicals, including chromium, which is known to the state of California to cause cancer and birth defects or other reproductive harm.
For more information go to www.P65Warnings.ca.gov

Dimensions and specifications subject to change without notice.