# G-6361-LM61B

## SENTO Series

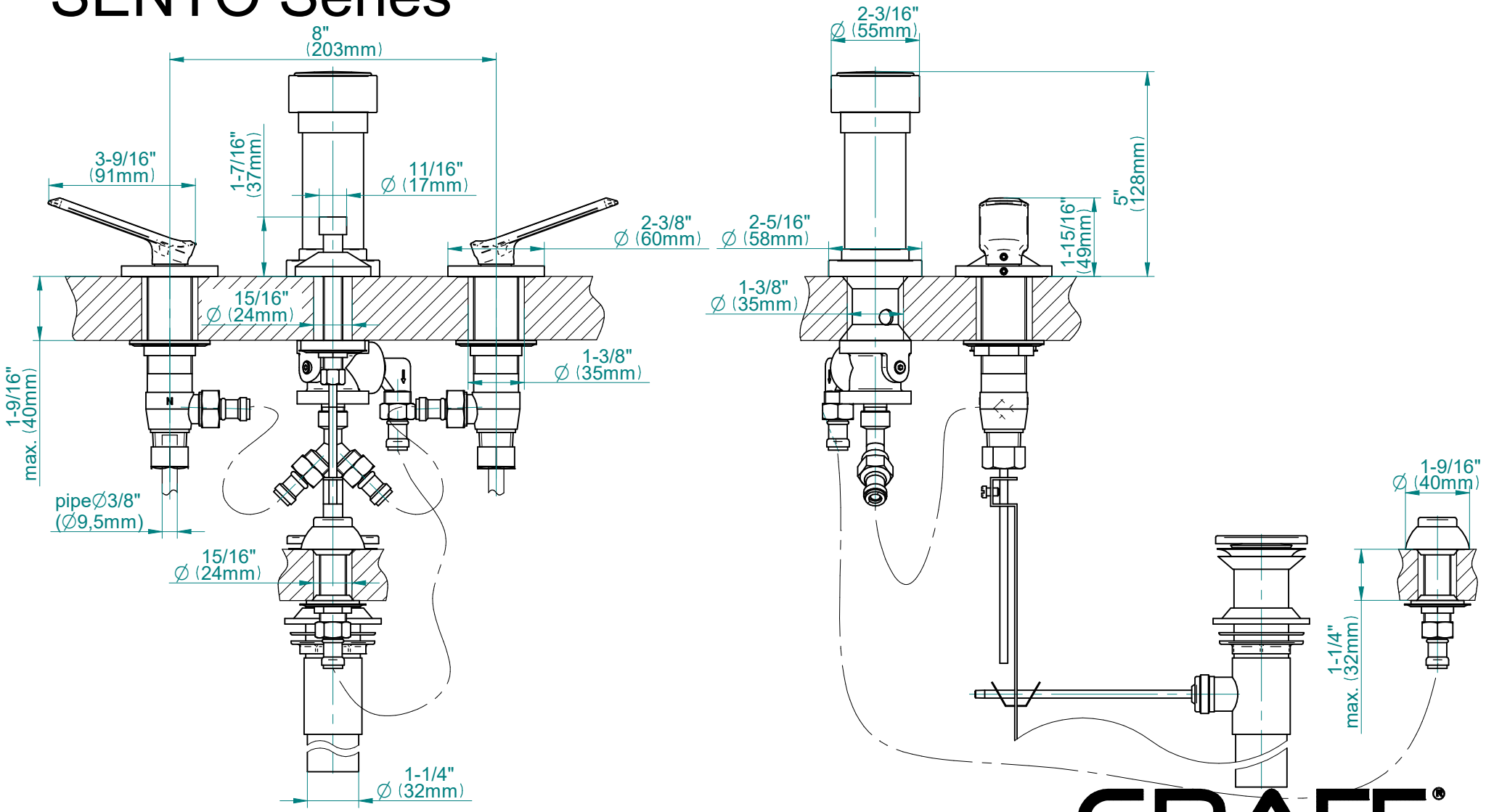


GRAFF®

CUTTING EDGE DESIGN