G-6111TB

SENSOR MIXERS Series

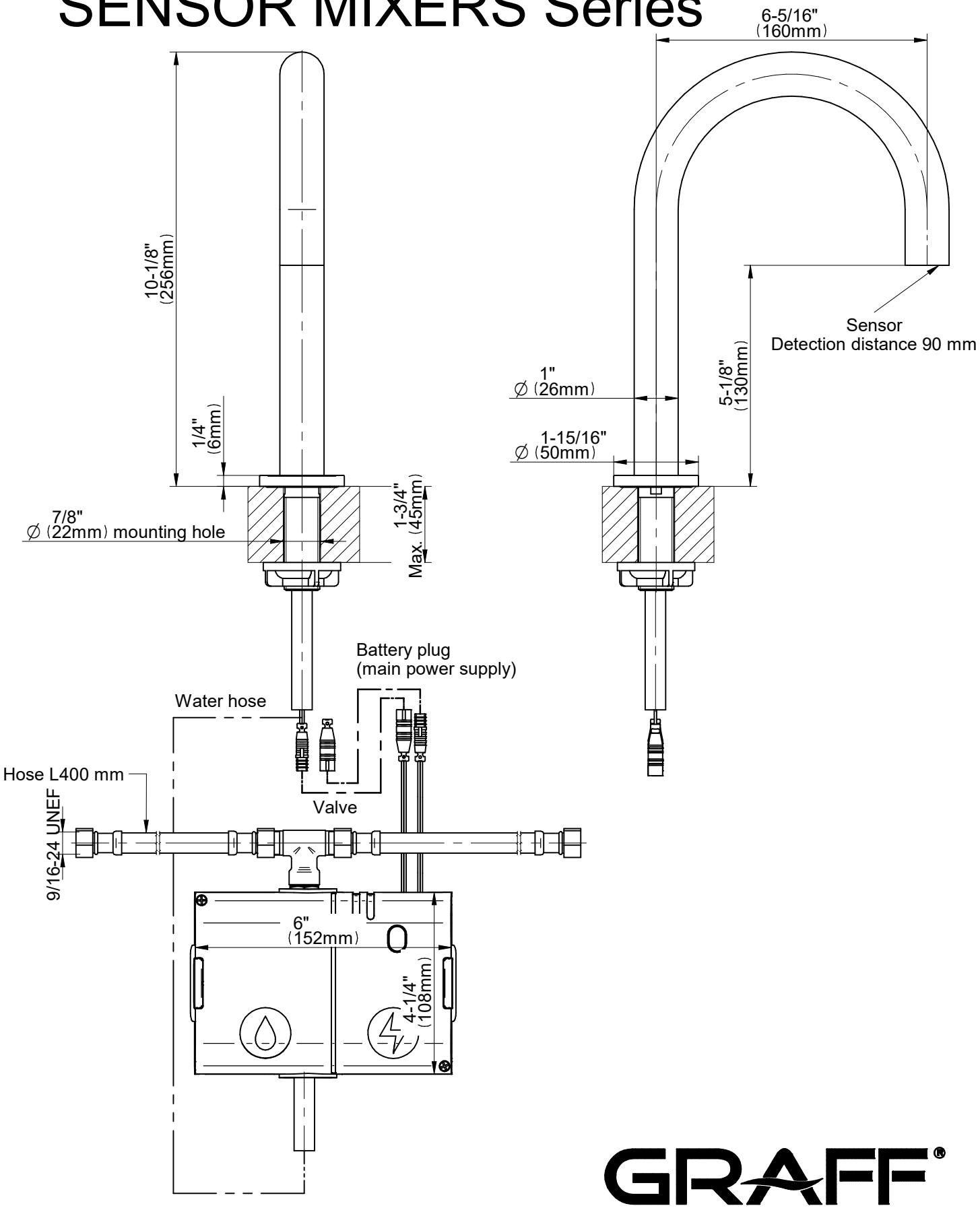

GRAFF®

Art of Bath