RIVA Series

G-18022HBD-T-**

G-18022HBP-T-**

G-18022HBF-T-**

G-18022HBQ-T-**

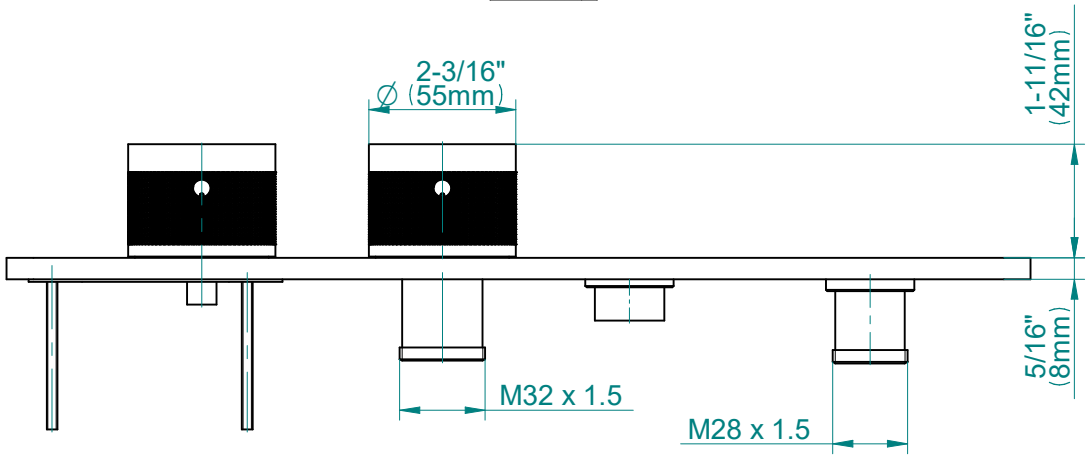

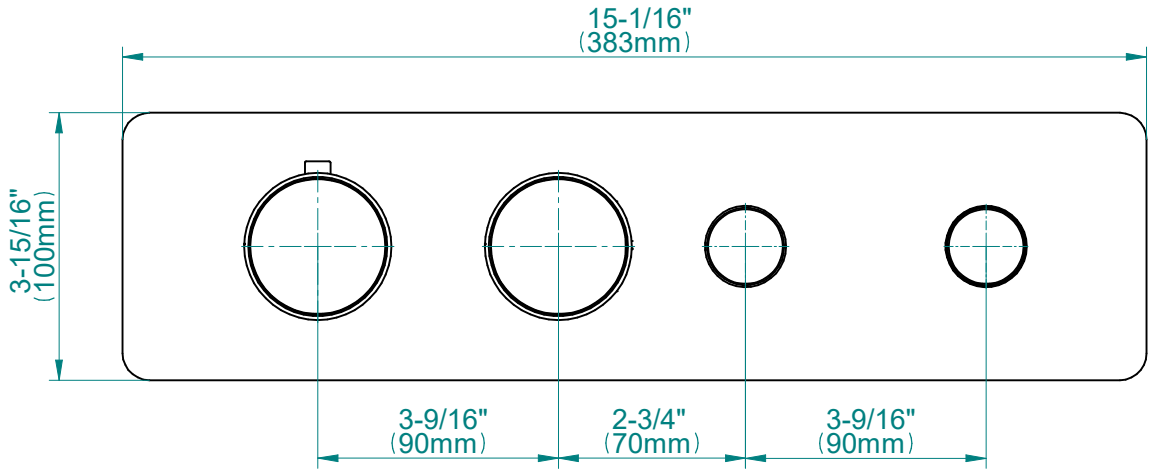

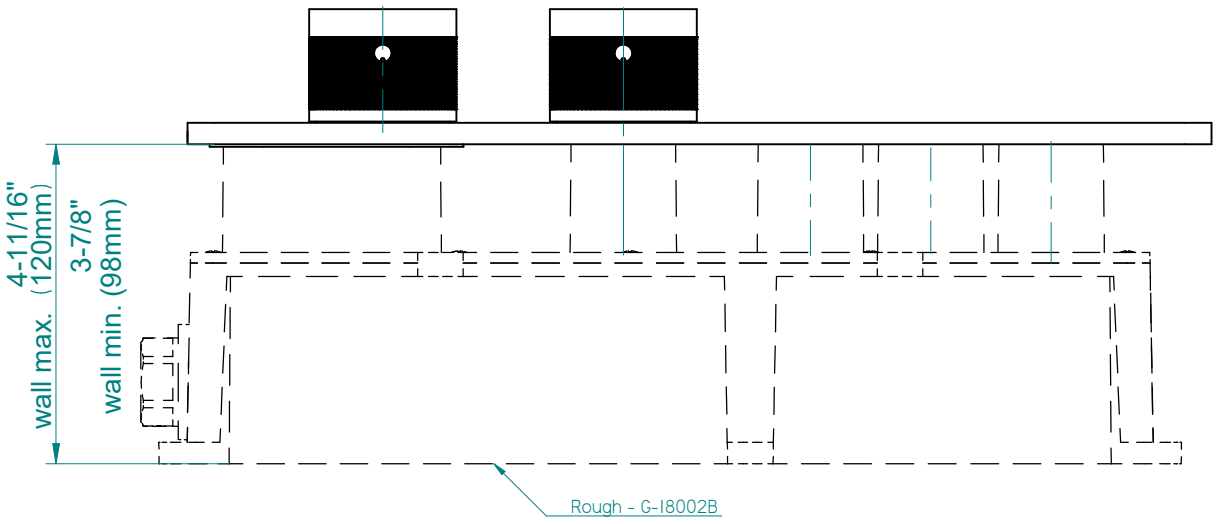

GRAFF®

Art of Bath