RIVA Series

G-18015HAD-T-**

G-18015HAP-T-**

G-18015HAF-T-**

G-18015HAQ-T-**

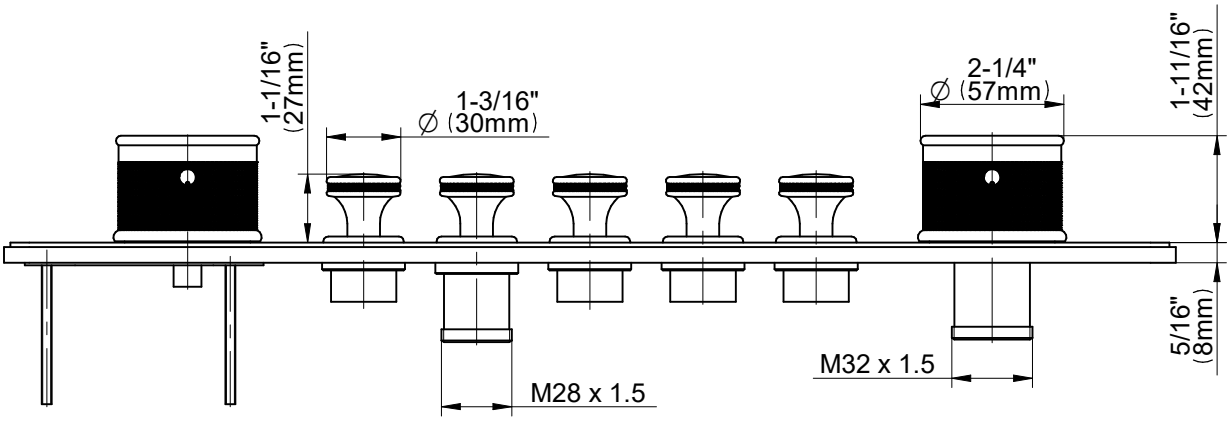

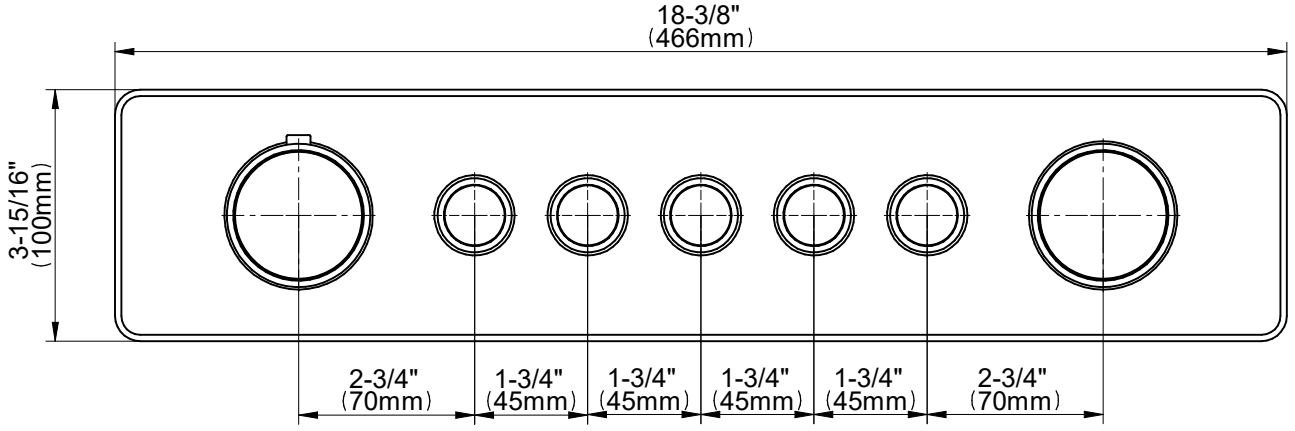

GRAFF®
Art of Bath