RIVA Series

G-18014HAD-T-**

G-18014HAP-T-**

G-18014HAF-T-**

G-18014HAQ-T-**

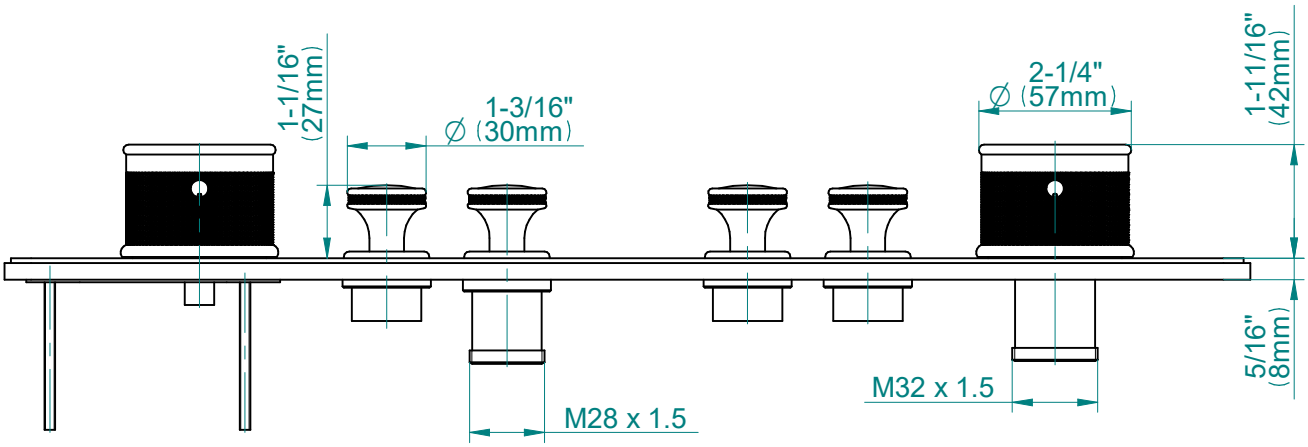

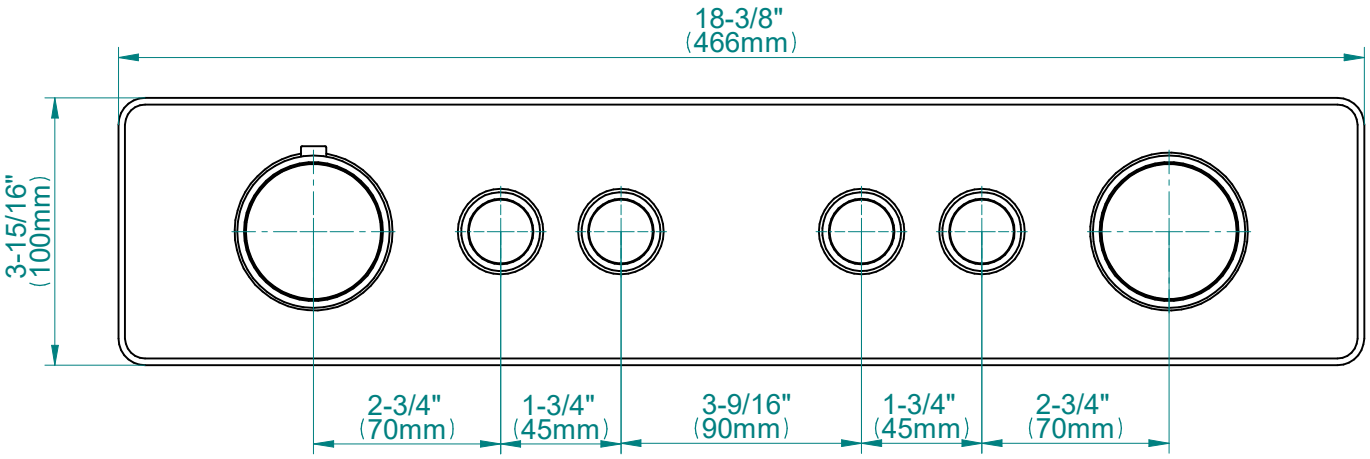

GRAFF®

Art of Bath