G-12189P-LM71B-**-T

PANTHEON Series

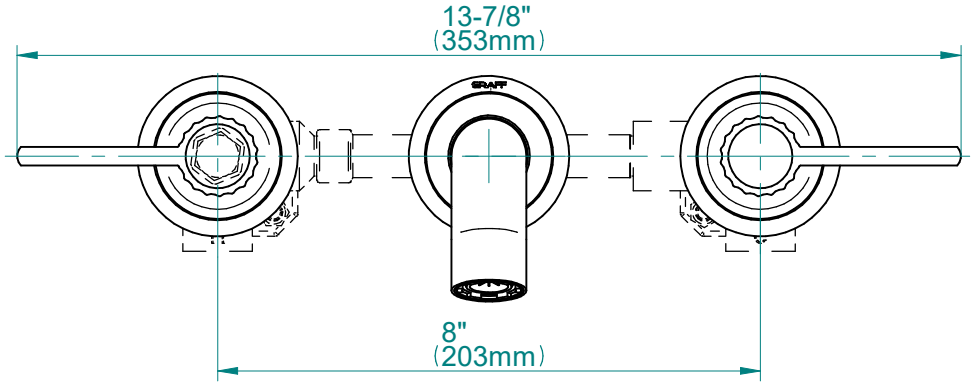

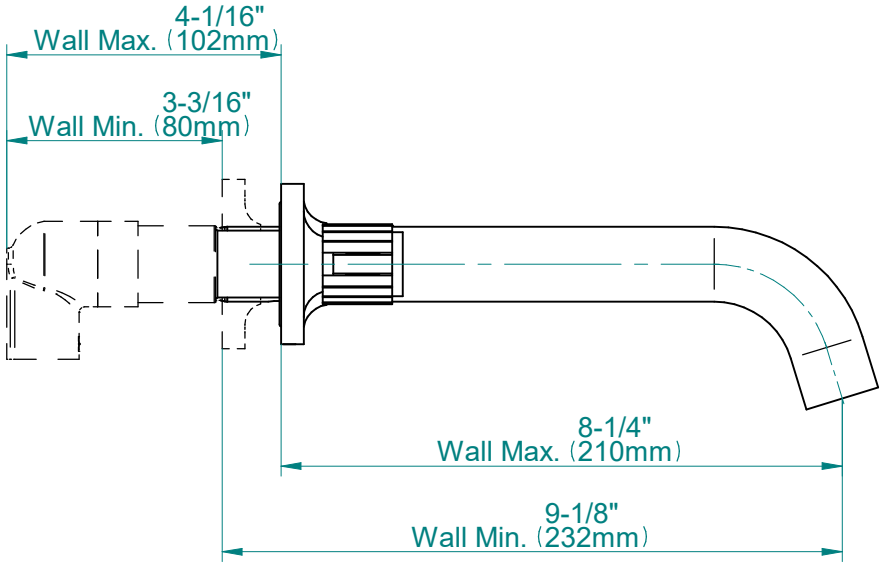

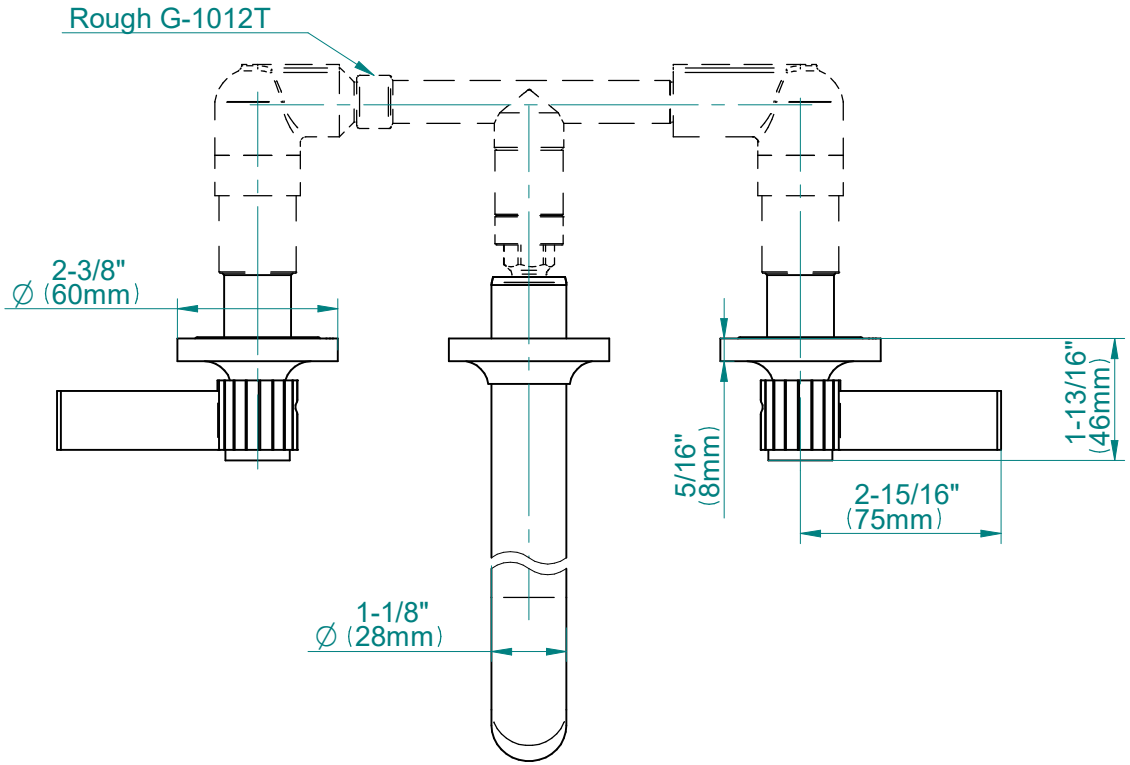

GRAFF®

Art of Bath