G-12179P-LM71B-**-T

PANTHEON Series

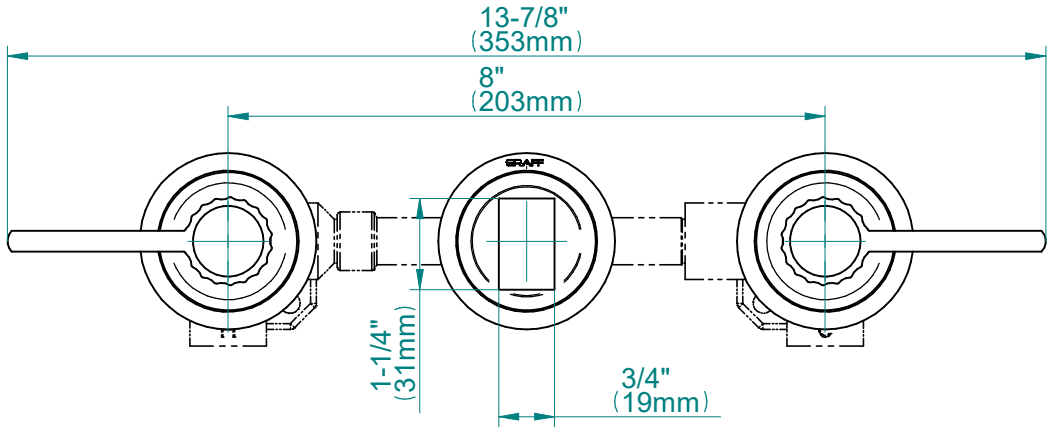

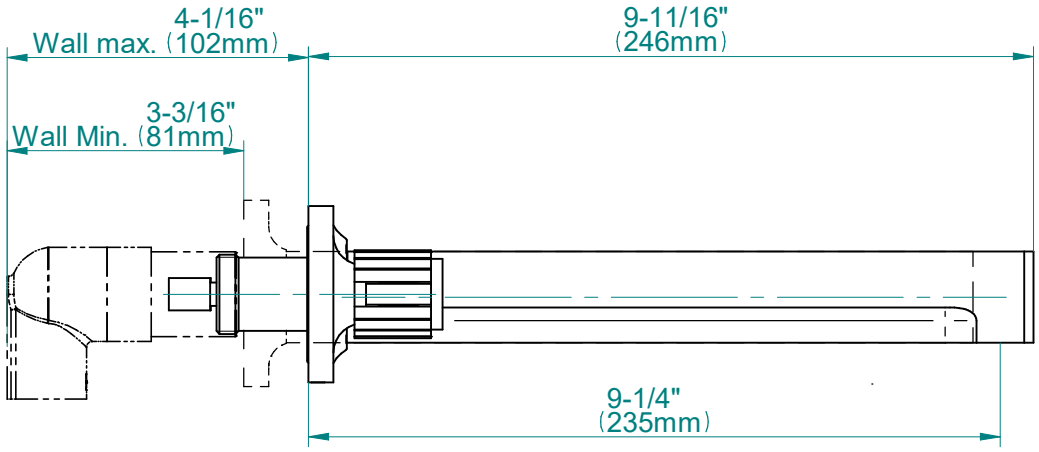

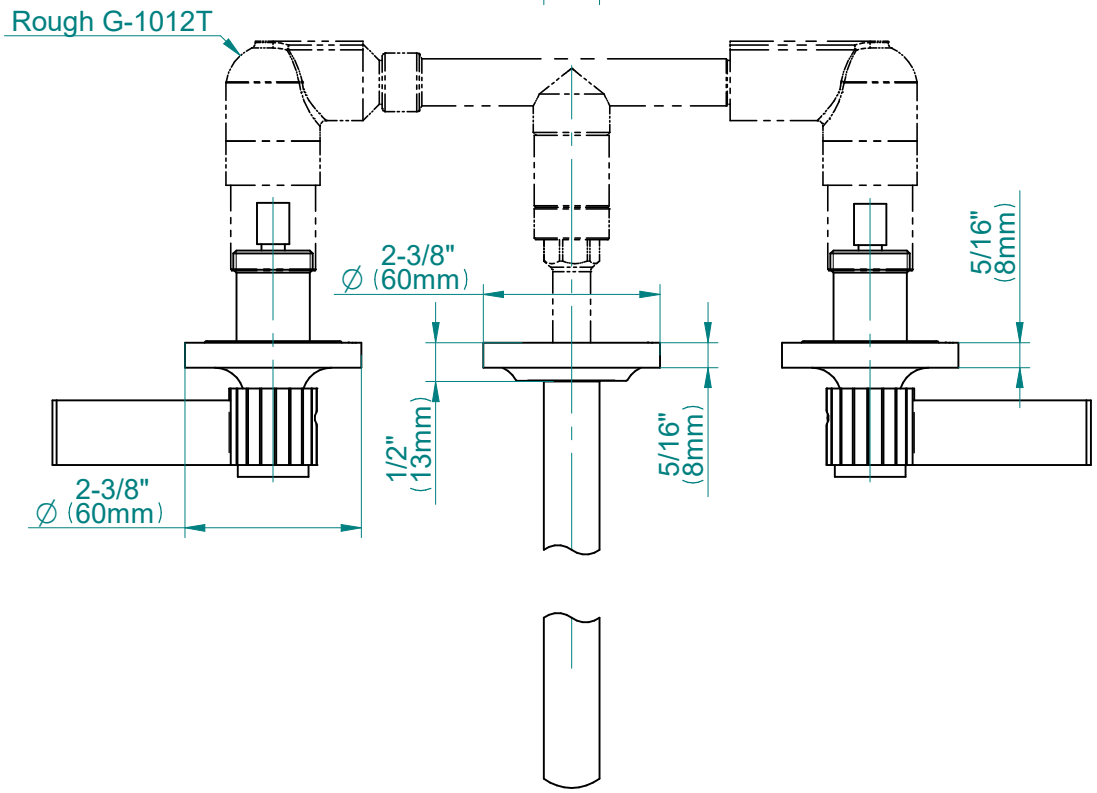

GRAFF®
Art of Bath