G-1012T

ROUGH Series

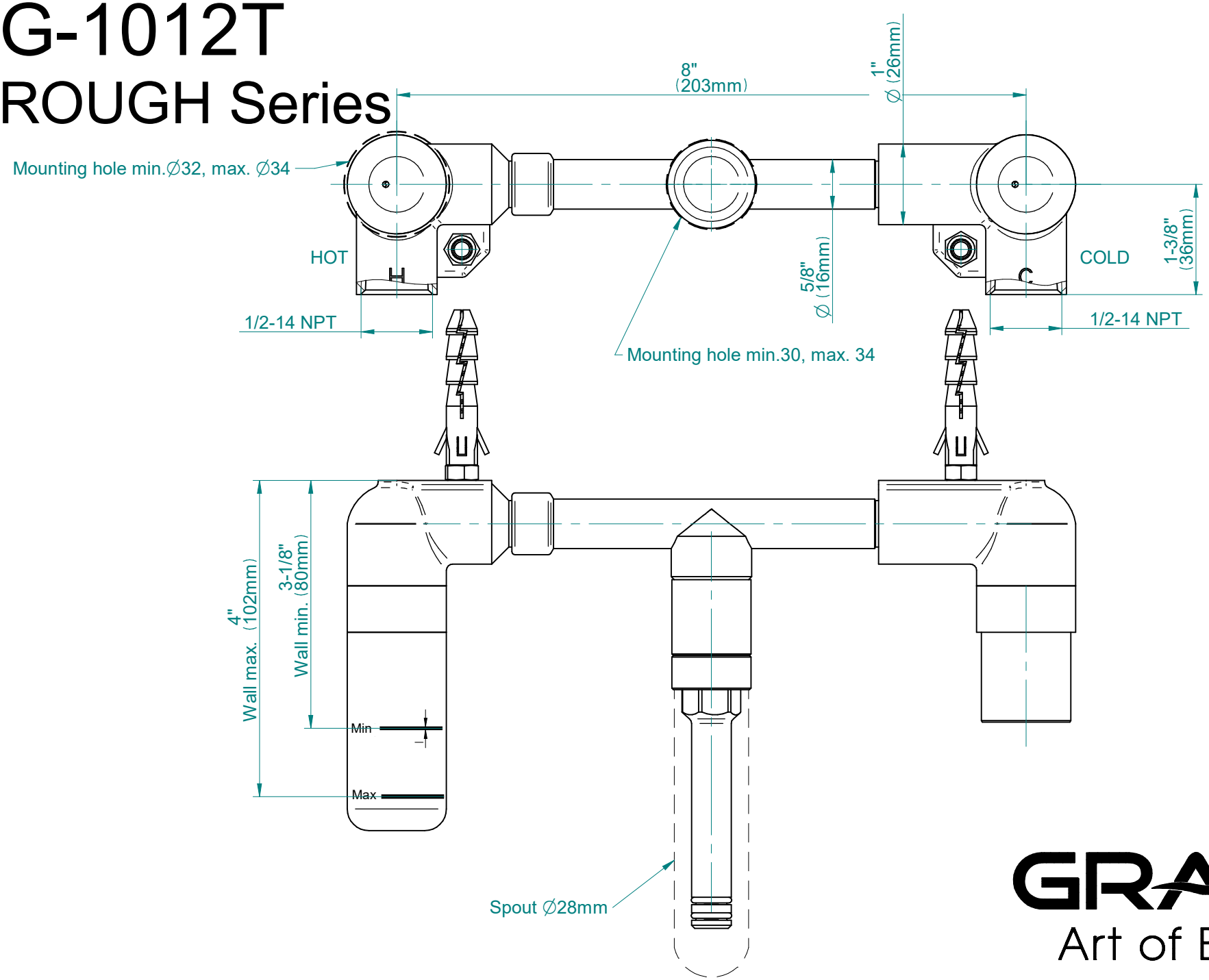

GRAFF®

Art of Bath