BJR-20

Top view

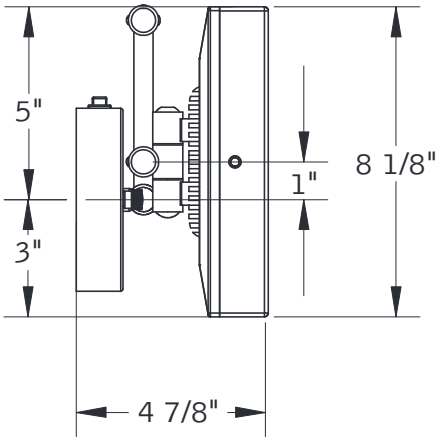

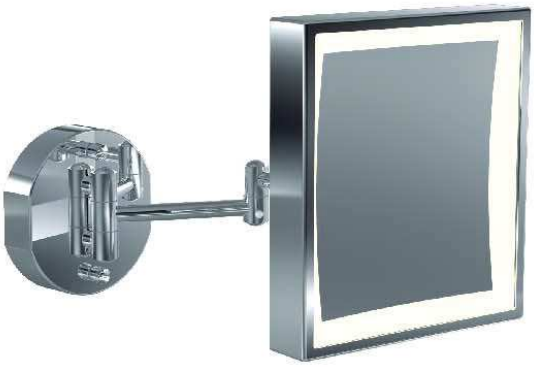

The center of the mirror is 1 3/4" above the center of the outlet box. Since the average user's eye height is 58 3/4" the outlet box xhould be centered 57" above the floor.

Side view

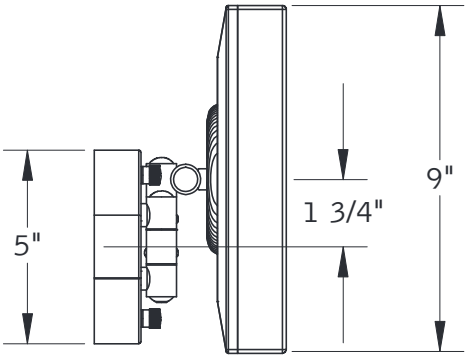

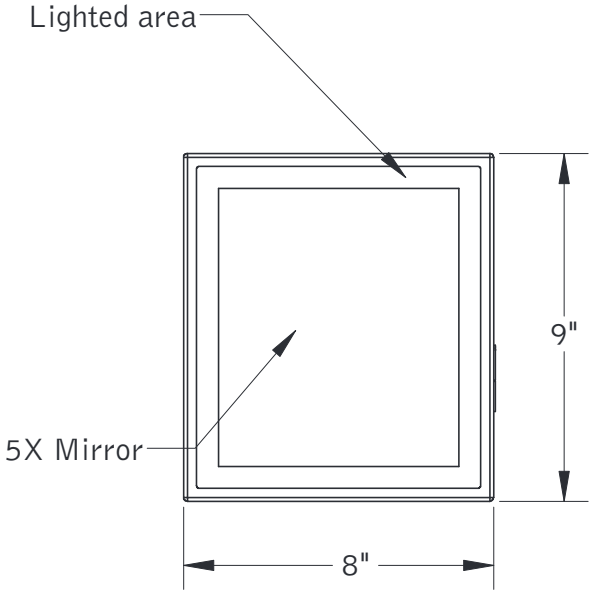

©2015 Remcraft Lighting Products