BJR-110

Top view

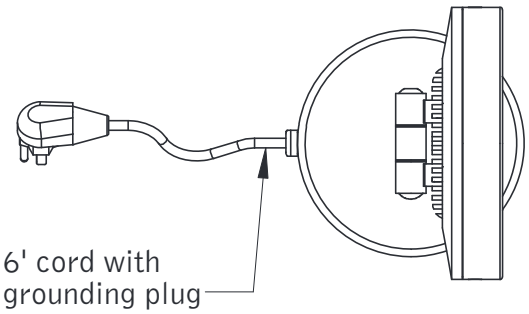

Side view

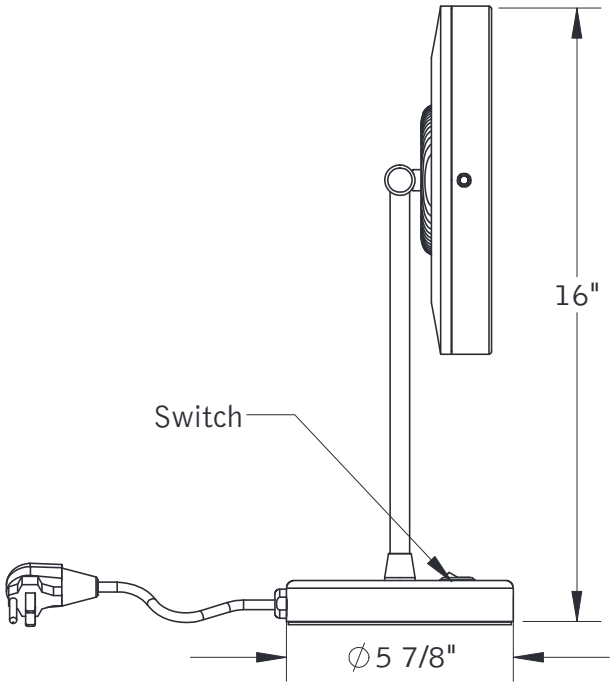

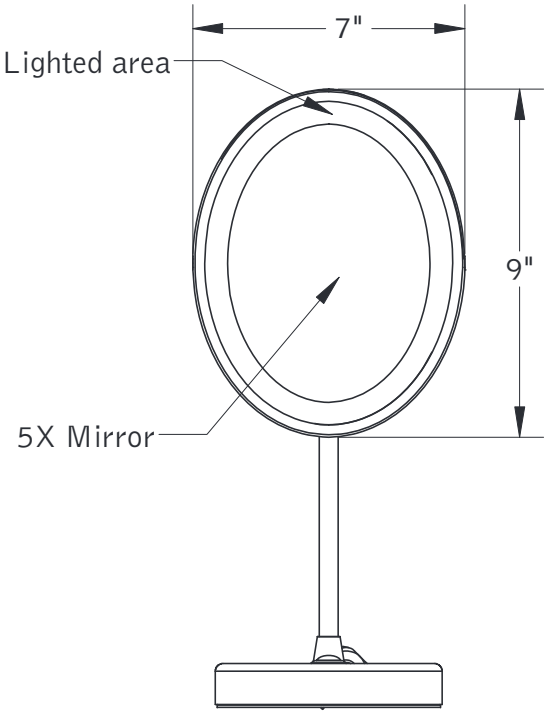

©2015 Remcraft Lighting Products