BJR-10

Top view

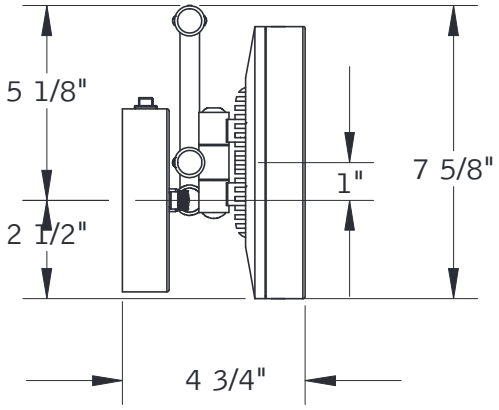

The center of the mirror is 1 3/4" above the center of the outlet box. Since the typical user's eye heighht is 58 3/4" the outlet box should be centered 57" above the floor

Side view

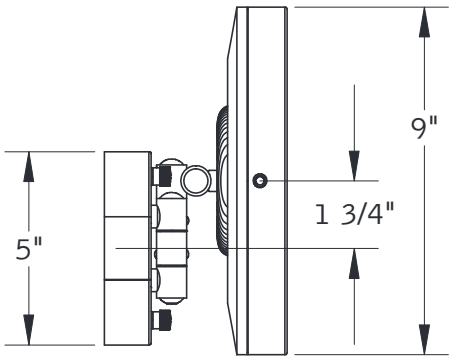

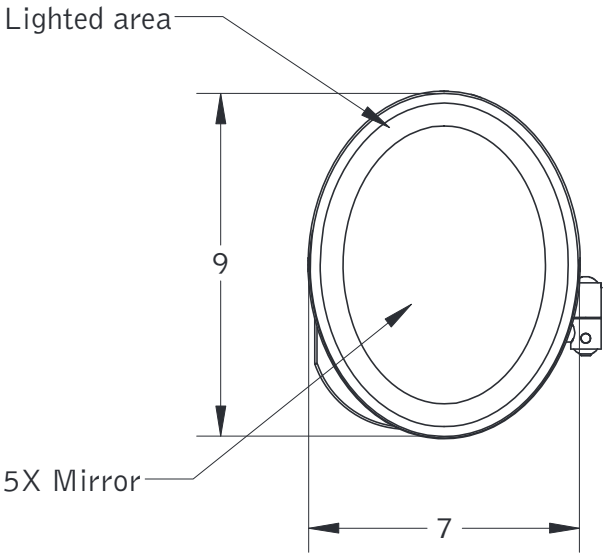

©2015 Remcraft Lighting Products