AQUATIC
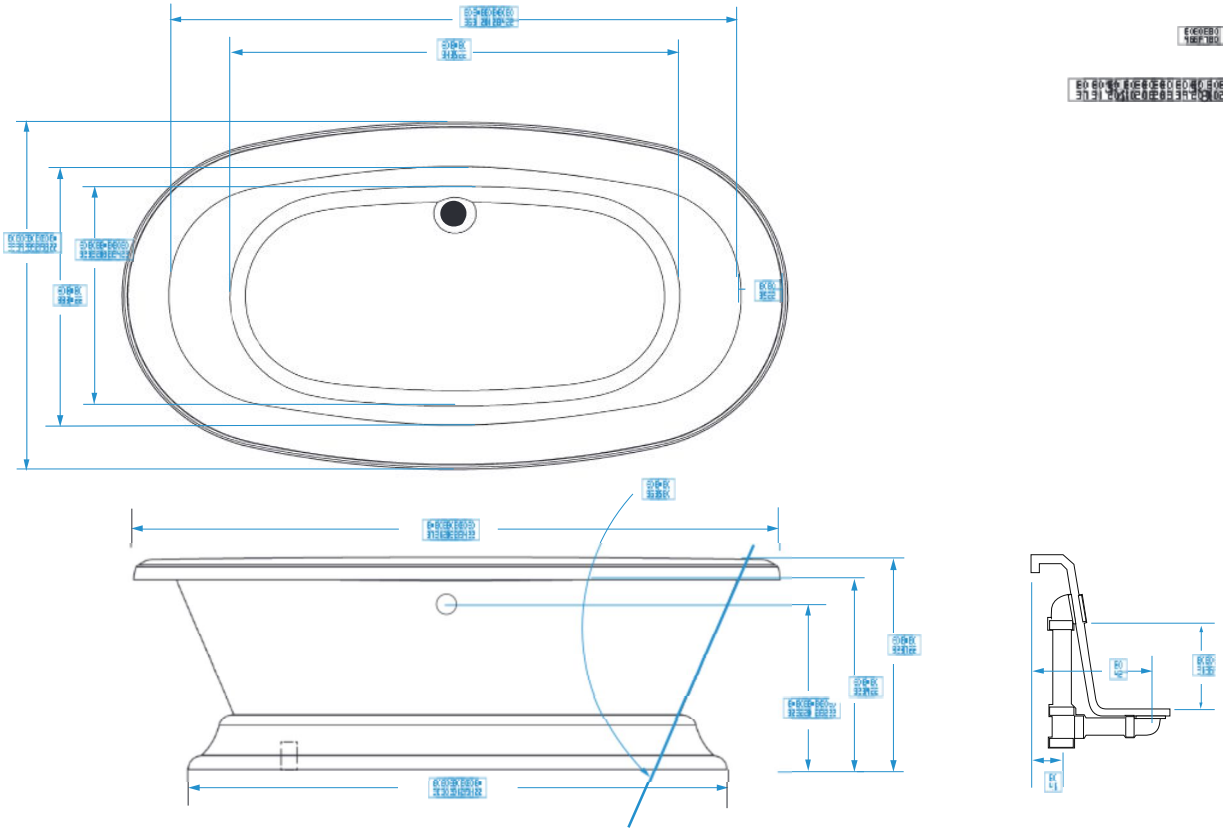
The bath people