California Faucets®

Capitola™

12" Wall Shower Arm

Features

9112-87

- *25+ artisan finishes including 10+ PVD finishes*
- *All brass construction*
- *Includes adjustable flange*

9112-87 shown

Codes/Standards Applicable

Product meets or exceeds the following:

- *ASME A112.18.1/CSA B125.1*

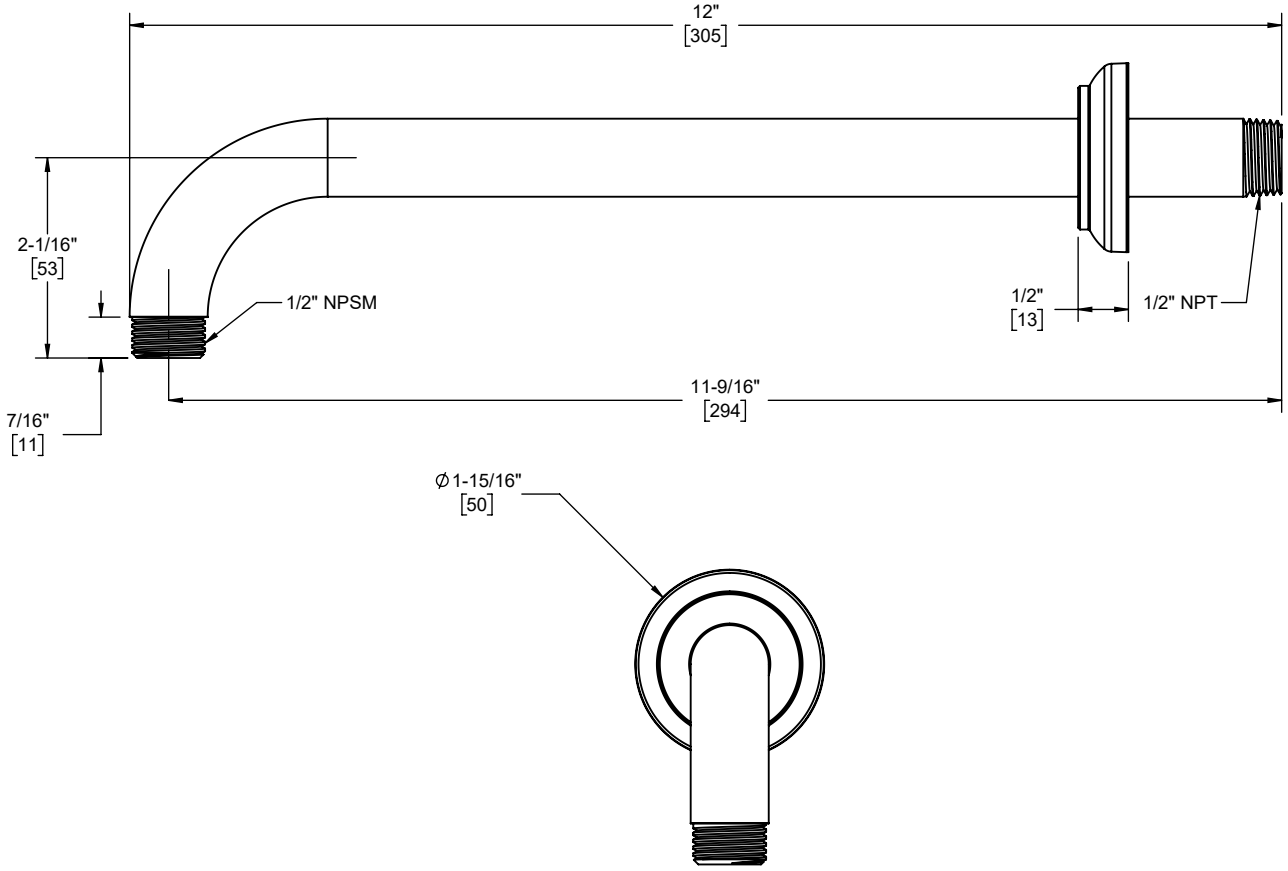

Dimensions are inches, rounded to 1/16"
[Dimensions in brackets are mm, rounded to 1mm]

Specifications subject to change without notice