Reserve tissue holder - Chrome

SERIES SPECIFIC

83 590 979 Product version from 7/1/2023



- Flange diameter 1-5/8"
- 4-1/8" Projection

Fits: LISSÉ, META

Chrome	83 590 979-00
Brushed Platinum	83 590 979-06
Dark Chrome	83 590 979-19
Light Gold (PVD)	83 590 979-26
Brushed Light Gold (PVD)	83 590 979-27
Matte Black	83 590 979-33
Brushed Gold (PVD)	83 590 979-37
Brushed Dark Brass (PVD)	83 590 979-39
Brushed Bronze (PVD)	83 590 979-42
Brushed Dark Bronze (PVD)	83 590 979-43
Brushed Champagne (22kt Gold)	83 590 979-46
Champagne (22kt Gold)	83 590 979-47
Brushed Chrome	83 590 979-93
Brushed Dark Platinum	83 590 979-99

DORN BRACHT

Reserve tissue holder - Chrome

SERIES SPECIFIC

83 590 979 Product version from 7/1/2023

mm [inches]

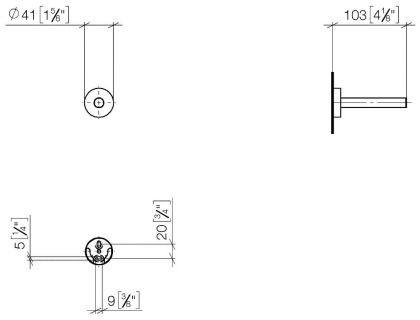

Reserve tissue holder - Chrome

SERIES SPECIFIC

83 590 979 Product version from 7/1/2023

Parts for other finishes can be found here: Brushed Platinum

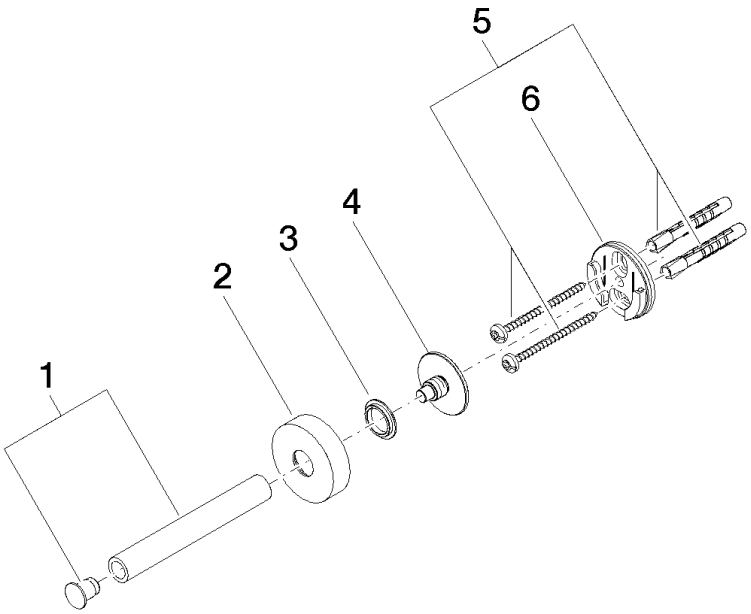

Spare parts list

Number	Item Number	Designation	Number of units	Lead time
6	08 17 97 501 07	holder	3.00	14
1	90 17 97 567 00-00	holder	1.00	26
5	05 30 31 025 00 90	fixing set	1.00	14
3	08 30 11 516 90	ring	1.00	14
4	08 17 97 560 90	holder	1.00	14
2	90 27 97 508 00-00	rosette	1.00	26