Reserve tissue holder - Chrome

SERIES SPECIFIC

83 590 976 Product version from 4/1/2024



Fits: IMO, LULU

- Center to center mounts 2-3/8"
- Width 3-1/2"
- Height: 6-1/8 mm
- 5-1/8" Projection

Chrome	83 590 976-00
Brushed Platinum	83 590 976-06
Dark Chrome	83 590 976-19
Brushed Light Gold (PVD)	83 590 976-27
Brushed Gold (PVD)	83 590 976-37
Brushed Dark Brass (PVD)	83 590 976-39
Brushed Bronze (PVD)	83 590 976-42
Brushed Chrome	83 590 976-93
Brushed Dark Platinum	83 590 976-99

DORN BRACHT

Reserve tissue holder - Chrome

SERIES SPECIFIC

83 590 976 Product version from 4/1/2024

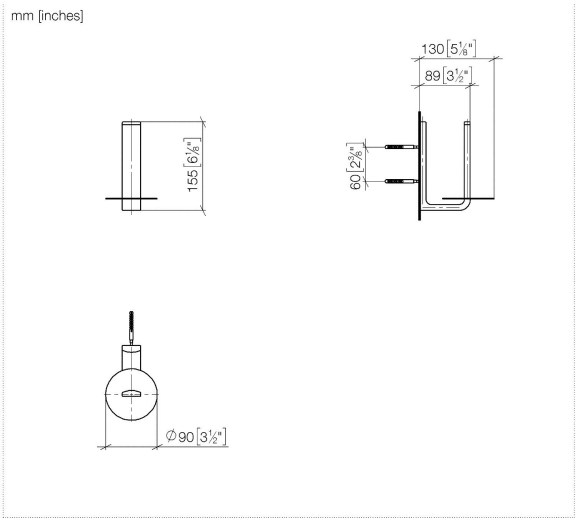

Reserve tissue holder - Chrome

SERIES SPECIFIC

83 590 976 Product version from 4/1/2024

Parts for other finishes can be found here: Brushed Platinum

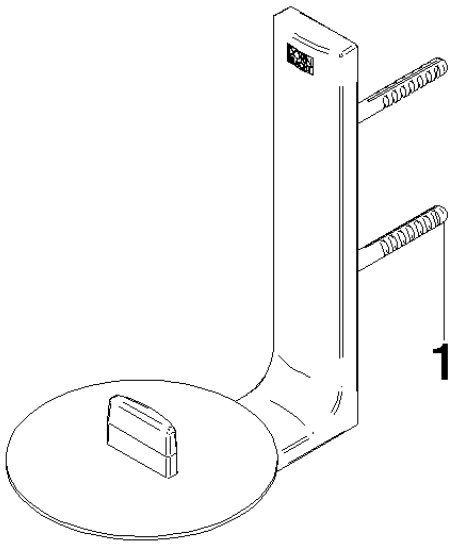

Spare parts list

Number	Item Number	Designation	Number of units	Lead time
1	90 30 30 244 00 90	fixing set	1.00	14