Tissue holder - Chrome

SERIES SPECIFIC

83 525 976 Product version from 4/1/2024



- Center to center mounts 9"
- Width 11-1/4"
- Height: 2-7/8 mm
- 4" Projection

Fits: IMO, LULU

Chrome	83 525 976-00
Brushed Platinum	83 525 976-06
Dark Chrome	83 525 976-19
Brushed Light Gold (PVD)	83 525 976-27
Brushed Gold (PVD)	83 525 976-37
Brushed Dark Brass (PVD)	83 525 976-39
Brushed Bronze (PVD)	83 525 976-42
Brushed Chrome	83 525 976-93
Brushed Dark Platinum	83 525 976-99

DORN BRACHT

Tissue holder - Chrome

SERIES SPECIFIC

83 525 976 Product version from 4/1/2024

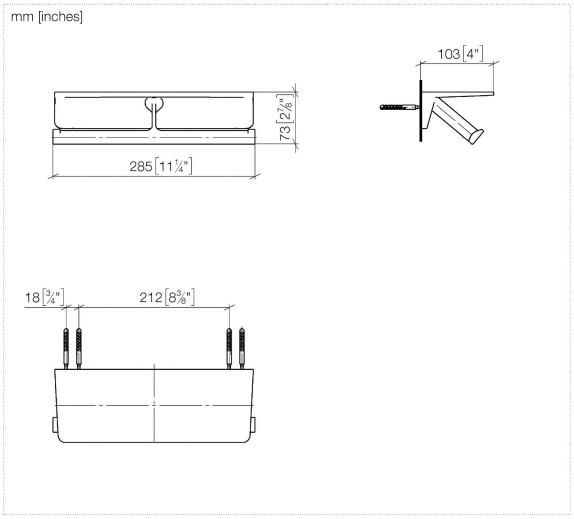

Tissue holder - Chrome

SERIES SPECIFIC

83 525 976 Product version from 4/1/2024

Parts for other finishes can be found here: Brushed Platinum

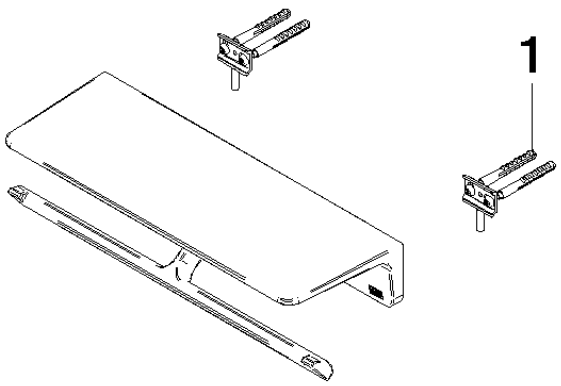

Spare parts list

Number	Item Number	Designation	Number of units	Lead time
1	90 30 30 242 00 90	fixing set	2.00	14