DORN BRACHT

Tissue holder with cover - Chrome

SERIES SPECIFIC

83 510 979 Product version from 7/1/2023



- Width 5-7/8"
- Height 3-3/4"
- Flange diameter 1-5/8"
- 1-5/8" Projection

Fits: LISSÉ, META

Chrome	83 510 979-00
Brushed Platinum	83 510 979-06
Dark Chrome	83 510 979-19
Light Gold (PVD)	83 510 979-26
Brushed Light Gold (PVD)	83 510 979-27
Matte Black	83 510 979-33
Brushed Gold (PVD)	83 510 979-37
Brushed Dark Brass (PVD)	83 510 979-39
Brushed Bronze (PVD)	83 510 979-42
Brushed Dark Bronze (PVD)	83 510 979-43
Brushed Champagne (22kt Gold)	83 510 979-46
Champagne (22kt Gold)	83 510 979-47
Brushed Chrome	83 510 979-93
Brushed Dark Platinum	83 510 979-99

DORN BRACHT

Tissue holder with cover - Chrome

SERIES SPECIFIC

83 510 979 Product version from 7/1/2023

mm [inches]

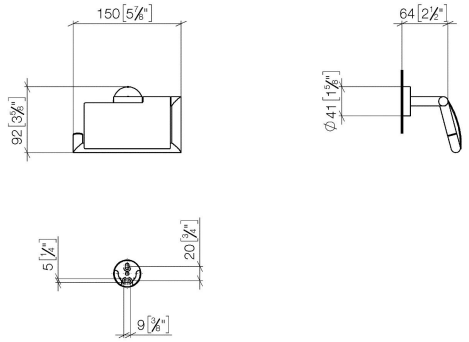

Tissue holder with cover - Chrome

SERIES SPECIFIC

83 510 979 Product version from 7/1/2023

Parts for other finishes can be found here: Brushed Platinum

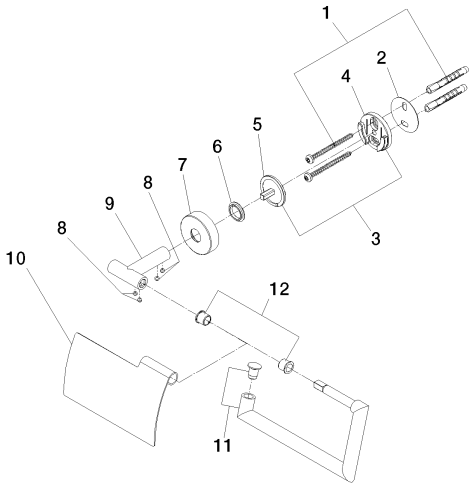

Spare parts list

Number	Item Number	Designation	Number of units	Lead time
3	05 17 97 501 01 90	holder	1.00	14
10	08 11 02 514-00	lid	1.00	26
4	08 17 97 501 07	holder	1.00	14
1	05 30 31 025 00 90	fixing set	1.00	14
9	05 17 97 562 01-00	holder	1.00	26
6	08 30 11 516 90	ring	1.00	14
5	08 17 97 559 90	holder	1.00	14
11	90 28 22 628 00-00	holder	1.00	26
2	05 30 11 519 00 90	disc	1.00	14
8	90 31 11 038 00 90	pin	4.00	14
7	90 27 97 508 00-00	rosette	1.00	26
12	90 18 40 501 00 90	sleeve	2.00	26