MADISON Towel bar - Chrome

MADISON

83 045 361 Product version from 7/3/2016



- Center to center mounts 17-3/4"
- Width 20-1/8"
- Height 2-3/8"
- Flange diameter 2-3/8"
- 3-1/2" Projection

NOTE: Standard glass mounting is for 3/8" glass only.

For 1/2" or larger please contact Dornbracht Technical Service.

Chrome	83 045 361-00
Brushed Platinum	83 045 361-06
Platinum	83 045 361-08
Durabrass (23kt Gold)	83 045 361-09
Brushed Durabrass (23kt Gold)	83 045 361-28
Brushed Dark Brass (PVD)	83 045 361-39
Brushed Bronze (PVD)	83 045 361-42
Brushed Dark Platinum	83 045 361-99

MADISON Towel bar - Chrome

83 045 361 Product version from 7/3/2016

mm [inches]

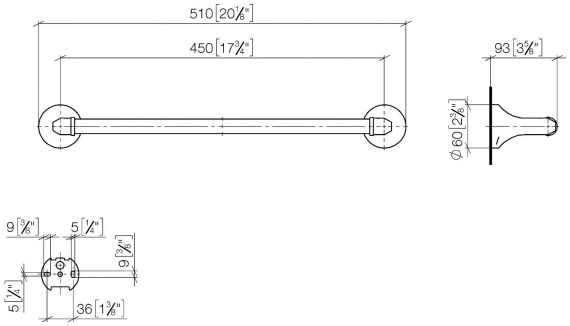

MADISON Towel bar - Chrome

83 045 361 Product version from 7/3/2016

Parts for other finishes can be found here: Brushed Platinum

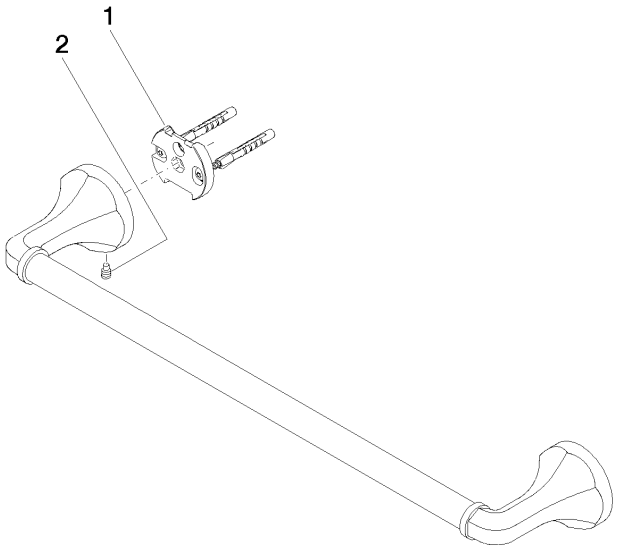

Spare parts list

Number	Item Number	Designation	Number of units	Lead time
1	05 17 97 507 00 90	fixing set	2.00	14
2	04 31 11 140 00 90	pin	2.00	14