VAIA Towel bar - Chrome

VAIA

83 030 809 Product version from 3/13/2017 to 8/29/2019



- Center to center mounts 11-3/4"
- Width 14-1/8"
- Height 2-3/8"
- Flange diameter 2-3/8"
- 3-7/8" Projection

Chrome	83 030 809-00
Brushed Platinum	83 030 809-06
Platinum	83 030 809-08
Dark Chrome	83 030 809-19
Brushed Durabrass (23kt Gold)	83 030 809-28
Brushed Dark Brass (PVD)	83 030 809-39
Brushed Bronze (PVD)	83 030 809-42
Brushed Dark Bronze (PVD)	83 030 809-43
Brushed Champagne (22kt Gold)	83 030 809-46
Champagne (22kt Gold)	83 030 809-47
Brushed Dark Platinum	83 030 809-99

DORN BRACHT

VAIA Towel bar - Chrome

83 030 809 Product version from 3/13/2017 to 8/29/2019

mm [inches]

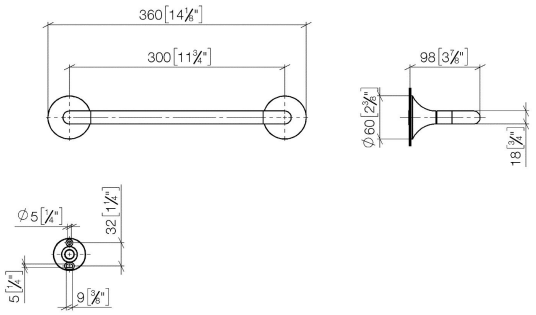

VAIA Towel bar - Chrome

83 030 809 Product version from 3/13/2017 to 8/29/2019

Parts for other finishes can be found here: Brushed Platinum

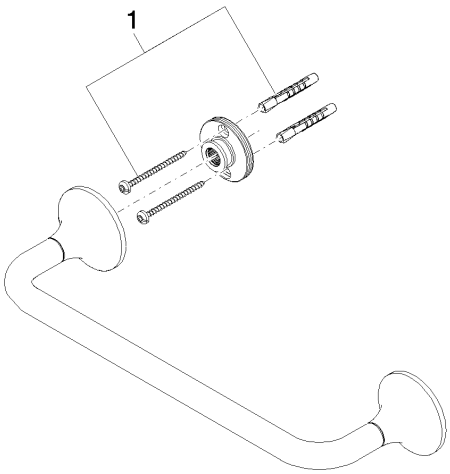

Spare parts list

Number	Item Number	Designation	Number of units	Lead time
1	05 30 31 025 00 90	fixing set	1.00	14