MADISON Towel bar - Chrome

MADISON

83 030 361 Product version from 7/3/2016



- Center to center mounts 11-3/4"
- Width 14-1/8"
- Height 2-3/8"
- Flange diameter 2-3/8"
- 3-1/2" Projection

Chrome	83 030 361-00
Brushed Platinum	83 030 361-06
Platinum	83 030 361-08
Durabrass (23kt Gold)	83 030 361-09
Brushed Durabrass (23kt Gold)	83 030 361-28
Brushed Dark Brass (PVD)	83 030 361-39
Brushed Dark Platinum	83 030 361-99

MADISON Towel bar - Chrome

83 030 361 Product version from 7/3/2016

mm [inches]

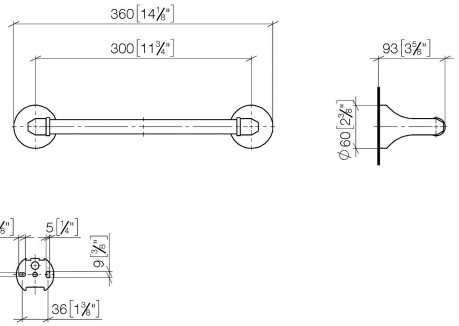

MADISON Towel bar - Chrome

83 030 361 Product version from 7/3/2016

Parts for other finishes can be found here: Brushed Platinum

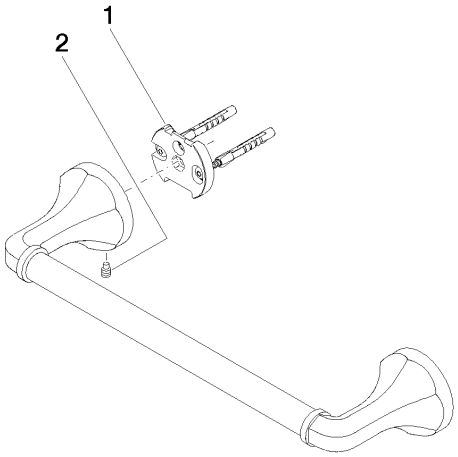

Spare parts list

Number	Item Number	Designation	Number of units	Lead time
2	04 31 11 140 00 90	pin	2.00	14
1	05 17 97 507 00 90	fixing set	2.00	14