Widespread Faucet - Single Handle

PHYLRICH®
Defining Luxury Since 1959

501-09

▪ PRODUCT FEATURES

- Style: Traditional
- Collection: Hex Modern
- Temperature Controlled By Handle
- Cross Handle
- Low / Square Spout
-

▪ TECHNICAL DETAILS

ADA Compliance: No
Deck Thickness Maximum: 2"
Deck Thickness Minimum: 1/8"
Drain Assembly Material: Brass
Drain Style: Push-to-Close
Fitting Hole Diameter: 1 1/8"
Number of Holes: Two Hole
Number of Handles: One
Handle Spread Maximum: 12"
Handle Spread Minimum: 8"
Handle Turn Angle: 180°
Spout Reach: 5 7/8"
Spout Height: 6 5/8"
Inlet Connection Type: Male 1/2" NPSM
Installation Type: Deck Mounted
Primary Material: Brass
Valve Material: Ceramic
Flow Restriction: 1.2 gpm
Water Pressure Maximum: 85 PSI
Water Pressure Minimum: 20 PSI
Water Pressure Recommended: 60 PSI

▪ PRODUCT DIMENSIONS

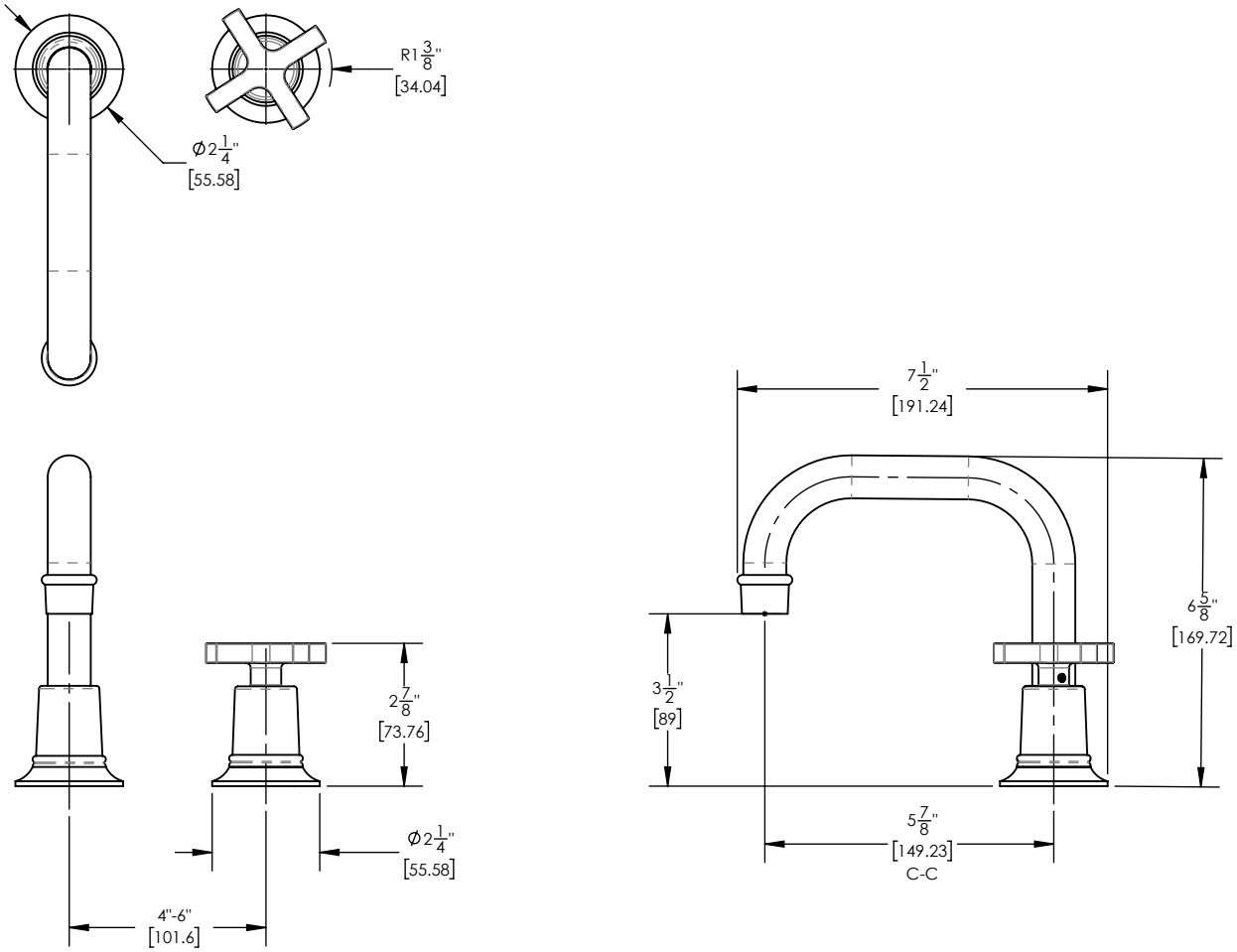

www. phylrich.com

1261 Logan Avenue, Costa Mesa, California 92626.
Phone: 714.361.4800 Fax: 714.617.3120

CODES & STANDARDS

ASME A112.181/ CSA B1251, ASME 112.18.2/ CSA B125.2, ANSI NSF, CEC

WARRANTY

Mechanical Warranty: 10 Years from date of purchase.
Finish Warranty: See catalog for further information.

Rev-